LWO DEVELOPMENT, LLC
EASTGATE APARTMENTS
OWATONNA, MN



ABOVE IMAGE FOR GRAPHIC ILLUSTRATION ONLY, NOT TO BE INTERPRETED FOR CONTRACTUAL OBLIGATION

INDEX OF DRAWINGS

SHEET NUMBER	SHEET NAME
GENERAL	
G100	COVER SHEET
G101	TITLE SHEET
G102	TYPICAL EXTERIOR ASSEMBLIES
G103	TYPICAL INTERIOR ASSEMBLIES
G110	LIFE SAFETY PLANS
G111	LIFE SAFETY PLANS
G120	MOUNTING HEIGHTS
CIVIL	
C101	REMOVALS PLAN
C201	CIVIL SITE PLAN
C301	GRADING PLAN
C401	UTILITY PLAN
C501	EROSION CONTROL PLAN
C601	CIVIL DETAILS
C602	CIVIL DETAILS
C603	CIVIL DETAILS
C604	CIVIL DETAILS
LANDSCAPE	
L101	BASE-BID LANDSCAPE PLAN
L102	LANDSCAPE DETAILS
L103	ALT-BID LANDSCAPE PLAN
L104	MONUMENT SIGN DETAILS
STRUCTURAL	
S000	GENERAL STRUCTURAL NOTES
S001	GENERAL STRUCTURAL NOTES
S100	FOOTING AND FOUNDATION PLAN
S101	LEVEL 1 FRAMING PLAN
S102	LEVEL 2 FRAMING PLAN
S103	LEVEL 3 FRAMING PLAN
S104	ROOF FRAMING PLAN
S500	FOUNDATION SECTIONS & DETAILS
S501	FOUNDATION SECTIONS & DETAILS
S700	PRECAST FRAMING SECTIONS & DETAILS
S710	WOOD FRAMING SECTIONS & DETAILS
S711	WOOD & STEEL FRAMING SECTIONS AND DETAILS
S712	STEEL FRAMING SECTIONS & DETAILS
ARCHITECTURAL	
A010	SITE PLAN
A200	GROUND FLOOR PLAN
A201	FIRST FLOOR PLAN
A202	SECOND FLOOR PLAN
A203	THIRD FLOOR PLAN
A204	ROOF PLAN
A210	ENLARGED PLANS AND ELEVATIONS
A211	UNIT PLANS & ELEVATIONS
A212	UNIT PLANS & ELEVATIONS
A213	UNIT PLANS & ELEVATIONS
A214	UNIT PLANS & ELEVATIONS
A215	UNIT PLANS & ELEVATIONS
A216	UNIT PLANS & ELEVATIONS
A217	UNIT PLANS & ELEVATIONS
A218	UNIT PLANS & ELEVATIONS
A219	UNIT PLANS & ELEVATIONS
A220	DOOR SCHEDULE
A301	EXTERIOR ELEVATIONS
A302	EXTERIOR ELEVATIONS
A310	GLAZING ELEVATIONS
A311	GLAZING DETAILS
A401	BUILDING SECTIONS
A420	VERTICAL CIRCULATION
A421	VERTICAL CIRCULATION

INDEX OF DRAWINGS

SHEET NUMBER	SHEET NAME
A422	VERTICAL CIRCULATION
A423	VERTICAL CIRC. DETAILS
A501	EXTERIOR WALL SECTIONS
A502	EXTERIOR WALL SECTIONS
A510	EXTERIOR DETAILS
A511	EXTERIOR DETAILS
A512	EXTERIOR DETAILS
A513	EXTERIOR DETAILS
A514	EXTERIOR DETAILS 1
A601	FINISH SCHEDULE
A602	GROUND FLOOR FINISH PLAN
A603	FIRST FLOOR FINISH PLAN
A604	SECOND FLOOR FINISH PLAN
A605	THIRD FLOOR FINISH PLAN
A611	INTERIOR DETAILS
A620	CASEWORK SCHEDULE
A700	GROUND FLOOR RCP
A701	FIRST FLOOR RCP
A702	SECOND FLOOR RCP
A703	THIRD FLOOR RCP
PLUMBING	
P001	PLUMBING SYMBOLS AND LEGEND
P200.1A	GROUND FLOOR PLUMBING PLAN - SANITARY/STORM
P200.1B	GROUND FLOOR PLUMBING PLAN - DOMESTIC WATER
P201	FIRST FLOOR PLUMBING PLAN
P202	SECOND FLOOR PLUMBING PLAN
P203	THIRD FLOOR PLUMBING PLAN
P301	PLUMBING ISOMETRICS
P302	PLUMBING ISOMETRICS
P303	PLUMBING ISOMETRICS
P304	PLUMBING ISOMETRICS
P701	PLUMBING DETAILS
P702	PLUMBING DETAILS
P801	PLUMBING SCHEDULES
MECHANICAL	
M001	MECHANICAL SYMBOLS & LEGEND
M300	GROUND FLOOR HVAC PLAN
M301	FIRST FLOOR HVAC PLAN
M302	SECOND FLOOR HVAC PLAN
M303	THIRD FLOOR HVAC PLAN
M401	ENLARGED UNIT HVAC PLANS
M402	ENLARGED HVAC UNIT PLANS
M701	MECHANICAL DETAILS
M702	MECHANICAL DETAILS
M801	MECHANICAL SCHEDULES
ELECTRICAL	
E0.00	ELECTRICAL SYMBOLS AND LEGENDS
E2.01	ELECTRICAL SITE PLAN
E3.01	GROUND FLOOR PLAN
E3.02	FIRST FLOOR PLAN
E3.03	SECOND FLOOR PLAN
E3.04	THIRD FLOOR PLAN
E6.01	UNIT PLANS
E6.02	UNIT PLANS
E6.03	UNIT PLANS
E6.04	ENLARGED FLOOR PLANS
E7.01	POWER RISER DIAGRAM
E8.01	ELECTRICAL DETAILS
E8.02	ELECTRICAL DETAILS
E8.03	ELECTRICAL DETAILS
E9.01	ELECTRICAL SCHEDULES
E9.02	ELECTRICAL SCHEDULES

REVISION SCHEDULE		
NO.	DESCRIPTION	DATE
1	PR 02	9/21/20

JLG architects

11/24/2020 12:04:14 PM

CODE / ZONING REVIEW

	TOPIC	IBC REFERENCE	RESPONSE
01 - BUILDING STATISTICS:			
1.010	Site / Lot Area		Lot 170104211; 0.212 acres Lot 170104212; 0.114 acres Lot 171220514; 0.518 acres Lot 171220501; 0.200 acres Lot 171220502; 0.200 acres Lot 171220513; 1.086 acres Lot 171220512; 0.271 acres Lot 171220511; 0.199 acres
1.020	Ground Building Area		16,449 SF
1.030	Level One Building Area		15,520 SF
1.040	Level Two Building Area		15,543 SF
1.050	Level Three Building Area		13,055 SF
1.060	Total Building Area		60,567 SF
1.070	Building Height		46'-10" from average grade plane to average roof plane of highest peak.
02 - ZONING / SITE REQUIREMENTS:			
2.010	Zoning District	OWATONNA ZONING	B-2 Community Business
2.020	Building Use	OWATONNA ZONING	Multi-family Housing
2.030	Density/FAR	OWATONNA ZONING	Minimum lot size of 1,700 s.f. per unit (61,200 s.f.)
2.040	Front Yard Setback	OWATONNA ZONING	30' - Structures in excess of 3 stories or 35 ft. are permitted as conditional uses. For each additional story over 3 stories or for each additional 10ft., and side yard setback requirements shall be increased 5ft.
2.050	Side Yard Setback	OWATONNA ZONING	10' - A side yard that directly abuts residential district shall be increased 10 additional feet over the minimum stated.15' required for conditional use.
2.060	Rear Yard Setback	OWATONNA ZONING	20'-0". Note: a varience has been applied for as 20'-0" has been exceeded.
2.070	Site Coverage Restrictions	OWATONNA ZONING	
2.080	Height Restrictions	OWATONNA ZONING	35' or 3 stories. 4 stories provided with a conditional use permit. For each additional story over 3 stories or for each additianl 10 ft. above the 35 ft., front and side yard setback requirements shall be increased 5 ft.
2.090	Parking Requirements	OWATONNA ZONING	A)30' parking requires 45.6 ft wall to wall min. width and 11 ft. isles 45° parking requires 52.5 ft wall to wall min. width and 13 ft. isles 60° parking requires 60.0 ft wall to wall min. width and 18 ft. isles 90° parking requires 62.0 ft wall to wall min. width and 24 ft. isles B)Multiple-family dwelling: studio and one bedroom require one stall per unit and two bedroom and greater require a minimum of two stalls per unit; and C)Elderly (senior citizen) housing: reservation of area equal to one parking space per unit. Initial development is, however, required of only one-half space per unit and said number of spaces can continue until such time as the City Council considers a need for additional parking spaces has been demonstrated.
2.100	Landscaping	OWATONNA ZONING	Business District. Screening from abutting residential districts shall be provided in the following instances: public utility buildings and structures, convenience food, car wash, motor fuel station, major auto repair, tire and battery stores and service, open and outdoor storage, service, sales and rentals, greenhouse and all open off-street parking areas of five or more spaces.
2.110	Possible Variances	OWATONNA ZONING	Rear setback less than 20 ft.
2.120	Other Notes / Requirements	OWATONNA ZONING	
03 - BUILDING CODE ANALYSIS - APPLICABLE GOVERNING CODES:			
3.010	Building Code		2020 MN State Building Code; Minnesota Rules, Chapter 1300 & 1305 (2018 IBC)
3.020	Fire Code		2020 MN State Fire Code
3.030	Mechanical Code		2020 MN State Mechanical and Fuel Gas Code
3.040	Energy Code		2015 Minnesota Energy Code
3.050	Plumbing Code		2015 Minnesota Plumbing Code
3.060	Electrical Code		2014 National Electrical Code with MN amendments; Effective date July 1st, 2014
3.070	Elevator Code		2015 MN State Elevator and Related Devices Code; MN Rules Chapter 1307.
3.080	Accessibility Code		2020 Minnesota Accessibility Code
3.090	Life Safety Code (NFPA)		
04 - BUILDING CLASSIFICATION AND LIMITATIONS:			
4.010	Occupancy Classification by Code	Chapter 3	R-2 Apartment houses S-2 Enclosed parking garage B Business (including assembly spaces with occupant load less than 50).
4.020	Occupancy Separation(s)	Table 508.3.3	S-2/R-2: Reduced to 1 hour for private vehicles (note b) S-2/B: Reduced to 1 hour for private vehicles (note b)
4.030	Non-Separated Uses	Section 508.3	N/A
4.040	Incidental Use Areas	Table 508.2	
4.050	Automatic Sprinkler System	Section 903.3.1.2	NFPA 13 within S-2 occupancy, per 903.2.10 NFPA 13R within R-2 and B occupancies.
4.060	Construction Type	Chapter 6	V-A
4.070	Buildings on the Same Lot	Section 903.3.1.2	N/A
4.080	Max. Allowable Area Basic Limit	Table 503	12,000 s.f. (based on most restrictive occupancy, R)
4.090	Allowable Area Increase for Frontage		20,466 s.f. allowable area with frontage increase
4.100	Allowable Area Increase for Sprinkler		
4.110	Area Increase Formula		W = 544 lf. (28') + 68 l.f. (30') /612 l.f. = 28.22' I = (612'/612' - .25)28.22/30 = 70.55% 12,000 x 70.55% = 8,466
4.120	Maximum Allowable Height Basic Limit	Table 503	R-2 – 4 stories, 60' (NFPA 13R) B – 3 stories, 50' (when not sprinklered NFPA 13)
4.130	Maximum Allowable Height with Modifications	Tables 504.3 and 504.4	None.
4.140	Is This a High Rise Classification	Section 403	No.
4.150	Separation Occupancies	Section 508	R-2, B, and S-2 separated occupancies
4.160	Specail Requirments Based on Occupancy	Section 510.2	
05 - FIRE RESTRICTIVE REQUIREMENTS:			
5.010	Construction Type	Chapter 6	VA
5.020	Structural Frame	Table 601	1
5.030	Exterior Bearing Walls	Tabke 601	1 HR MIN – Not less than that required by Fire Separation Distance: Fire Separation Distance x Occupancy < 5 feetn/a > 5 feet, but < 10 feetn/a > 10 feet, but < 30 feet1 hour at east lot line > 30 feet0
5.040	Interior Bearing Walls	Table 601	1 (See also occupancy separations and other requirements for fire-resistance ratings)
5.050	Interior Supporting Roof Bearing Walls	Table 601	1 (See also occupancy separations and other requirements for fire-resistance ratings)
5.060	Nonbearing Exterior Walls	Table 601	0 (See also occupancy separations and other requirements for fire-resistance ratings)
5.070	Nonbearing Interior Walls	Table 601	0 (See also occupancy separations and other requirements for fire-resistance ratings)
5.080	Floor Construction	Table 601	1
5.090	Roof Construction	Table 601	1
5.100	Exterior Wall Projections	Section 702	Balconies and similar projections shall not be required to have sprinkled fire protection where non-combustible fire treated wood construction is provided per IBC 702.2.3.1.
5.110	Exterior Wall Openings	Section 705	70% at east lot line, unlimited elsewhere.
5.120	Exterior Wall Parapet	Section 705	None required.
5.130	Fire Walls	Section 705	None required.
5.140	Fire Barriers	Section 706	N/A
5.150	Shaft Enclosures	Section 707	2 hour (connecting 4 stories) Includes trash chute and trash room.
5.160	Elevator Lobby	Section 706	Not required. Hoistway opening protection required per 3006.3
5.170	Exit Enclosures	Section 1020.1	2 Hour
5.180	Exit Passageway	Section 1024	N/A
5.190	Horizontal Exit	Section 1026	N/A
5.200	Atriums		N/A
5.210	Incidental Use Areas	Section 508.2	N/A
5.220	Control Areas	Section 414.2.3	N/A
5.230	Separation of Mixed Occ.	Table 508.4	2 hour between S-2 and R-2; 2 hour between B and R-2
5.240	Exterior Walls	Section 704	1 hour bearing walls; 0 hour non-load bearing walls.
5.250	Fire Partitions	Section 708	See Life Safety Plans
5.260	Dwelling Unit Demising Walls	Section 420	1 Hour
5.270	Corridor Walls	Table 1020.1	1/2 Hour
5.280	Elevator Lobby Walls	Section 3006	N/A
5.290	Horizontal Assemblies	Section 711.1	2 hour between S-2 and R-2; 1 hour between each dwelling unit
5.300	Penetrations	Section 714	Firestopping as required.
5.310	Joint Systems	Section 713	Firestopping as required.
5.330	Opening Protectives	Section 715	Corridors: 20 min. 1-hour partitions: 45 min. 2-hour shafts: 90 min.
5.340	Ducts/Transfer Openings		As required
5.350	Concealed Spaces	Section 717	Fully insulated per NFPA 13 Section 8.15.1.2.7 (Verify NFPA 13R)
5.360	Fireblocking	Section 718.2	As required.
5.370	Draftstopping - Floor and Ceiling	Sections 708.4 & 717.3.2	At dwelling unit separations and one side of corridor.
5.380	Draftstopping in Attic	Section 717.4.2	Between every 2 units not exceeding 3,000 s.f. and one side of corridor.
06 - EGRESS REQUIREMENTS:			
6.010	Occupancy	Chapter 10	R-2, S-2, B
6.020	Occupant Load	Chapter 10	R-2: 203 B: 54 S-2: 68
6.030	Accessible Means of Egress	Chapter 10	Where more than one means of egress is req'd (by Section 1015.1 or 1019.1) from any accessible space, not less than two accessible means of egress are req'd.
6.040	Exit Stairways	Chapter 10	To be accessible means of egress, must have area of refuge.
6.050	Elevators	Chapter 10	See Code – special requirements such as standby power and area of refuge.
6.060	Minimum Ceiling Height	Chapter 10	7'-6" min.
6.070	Minimum Door Height Clearance	Chapter 10	80" min.
6.080	Stairway Width	Chapter 10	44" required, 46"actual (minimum).
6.090	Stairway Headroom	Chapter 10	80" min.
6.100	Max Height Between Landings	Chapter 10	12'-0"
6.110	Handrails	Chapter 10	Required both sides of stairs.
6.120	Stair Run/Rise	Chapter 10	11"min./7" max.
6.130	Ramps	Chapter 10	N/A
6.140	Common Path of Egress	Chapter 10	R-2: 125' B: 100' S-2: 100'
6.150	Exit Access	Chapter 10	2 required from each story.
6.160	Exit Access Travel Distance	Chapter 10	R-2: 250' max. B: 200' max. S-2: 300' max.
07 - ACCESSIBILITY:			
7.010	Building Entrances	Chapter 11	60% of building entrances must be accessible
7.020	Public Restrooms	Chapter 11	See Plumbing Chapter
7.030	Dwelling Unit Requirements	Chapter 11	2% of units are to be Type A accessible when more than 20 dwelling units are provided. All other units are to be Type B accessible.
7.040	Type Accessible Quantity	Chapter 11	N/A
7.050	Type A Quantity	Chapter 11	2 (5%) provided, plus all units to meet Universal Design standards per MHFA.
7.060	Type B Quantity	Chapter 11	34, plus all units to meet Universal Design standards. Refer to unit plans for designation of Option A or Option B Toilet Rooms.
7.070	Type C Quantity	Chapter 11	N/A
7.080	Communication Features	Chapter 11	4 units required per IBC 2018

CODE / ZONING REVIEW

	TOPIC	IBC REFERENCE	RESPONSE
08 - INTERIOR ENVIRONMENT:			
8.010	Ventilation		See Mechanical
8.020	Temperature Control		System must provide 68 degree temp at a point 3ft above floor on the design heating day.
8.030	Lighting		See Electrical
8.040	Sound Transmission	Chapter 12	Common interior walls, partitions, and floor ceiling assemblies between adj dwelling units or between dwelling units and public spaces. Air-borne sound: STC > 50 STC (45 Field STC) – tested in accordance with ASTM E 90. Treat openings, penetrations, etc. to maintain rating (except entry doors). Structure-borne sound: IIC > 50 STC (45 Field IIC) – per ASTM E 492
8.050	Interior Space Dimensions		Refer to MHFA requirements in addition to IBC Chapter 12.
8.060	Access to Unoccupied Spaces		N/A
09 - ENERGY EFFICIENCY:			
9.010		Chapter 13	2015 COMMERCIAL ENERGY CODE FOR 4-STORY BUILDING.
10 - STRUCTURAL AND SPECIAL TESTING:			
10.010	Item Requiring Testing	Chapter 17	See Structural
10.020	Required Standard	Chapter 17	See Structural
10.030	Type of Inspector	Chapter 17	See Structural
10.040	Frequency	Chapter 17	See Structural
10.050	Responsible for Inspections	Chapter 17	See Structural
11 - PLUMBING FIXTURE REQUIREMENTS:			
11.010	Lavs (sinks)	Chapter 29	Men = 1 ; Women = 1
11.020	Water Closets (Toilets)	Chapter 29	Men = 1 ; Women = 1
11.030	Urinals	Chapter 29	
11.040	Drinking Fountains	Chapter 29	1

UNIT MATRIX

UNIT NAME	UNIT TYPE	UNIT SF	ACC. TYPE	TOTAL	1ST FLOOR	2ND FLOOR	3RD FLOOR	PERCENTAGE
UNIT 1A	1 BEDROOM	740 SF	TYPE B	3	1	1	1	22%
UNIT 1B	1 BEDROOM	770 SF	TYPE B	3	1	1	1	
UNIT 1C	1 BEDROOM	740 SF	TYPE B	1	1	-	-	
UNIT 1D	1 BEDROOM	746 SF	TYPE A	1	1	-	-	
UNIT 2A	2 BEDROOM	971 SF	TYPE B, OPT. A	8	2	3	3	78%
UNIT 2B	2 BEDROOM	1,003 SF	TYPE B, OPT. A	4	2	1	1	
UNIT 2C	2 BEDROOM	997 SF	TYPE B, OPT. A	6	2	2	2	
UNIT 2D	2 BEDROOM	1,065 SF	TYPE B, OPT. B	4	2	2	-	
UNIT 2E	2 BEDROOM	1,001 SF	TYPE B, OPT. B	2	1	1	-	
UNIT 2F	2 BEDROOM	988 SF	TYPE B, OPT. A	1	-	1	-	
UNIT 2G	2 BEDROOM	1,127 SF	TYPE B, OPT. B	1	-	-	1	
UNIT 2H	2 BEDROOM	1,222 SF	TYPE B, OPT. B	1	-	-	1	
UNIT 2I	2 BEDROOM	1,003 SF	TYPE A	1	-	1	-	
			TOTAL UNITS:	36	13	13	10	

NOTES:
- UNIT SF'S ARE CALCULATED USING THE EXTERIOR FACE OF SHEATHING, CENTER OF DEMISING WALL STUDS, AND CENTER OF CORRIDOR STUDS.
- 'TYPE A' UNIT ROOM NUMBERS ARE 105 & 212
- 5% OF UNITS ARE REQUIRED TO BE 'TYPE A' ACCESSIBLE. 5% OF 36 TOTAL UNITS IS 1.8 UNITS, OR 2 UNITS.
- UNITS 108, 202, 208, & 305: HEARING/VISION IMPAIRED UNITS.
- TOTAL OF APARTMENT UNITS WITH ACCESSIBLE COMMUNICATIONS FEATURES: 4 TOTAL UNITS (PER 2018 IBC TABLE E104.2.1)

PARKING SUMMARY

PARKING GARAGE	35*
SITE PARKING	25*
PROOF OF PARKING	6
TOTAL	**66**

*TWO ACCESSIBLE STALLS INCLUDED

SHEET MATERIAL ID LIST

MATERIAL ID	SPEC SECTION & DESCRIPTION
FIRE CAB-1	10 4400 - FIRE EXTINGUISHER CABINET

TRAVEL DISTANCE

Travel Distance	Path ID	Level
88'-9"	0A	
122'-6"	0B	
136'-1"	1A	
130'-5"	1B	
135'-3"	2A	
130'-1"	2B	
116'-4"	03	
135'-3"	3A	
135'-6"	3B	

LIFE SAFETY LEGEND

- 1 HOUR RATED WALL
- 1 HOUR RATED WALL (SMOKE)
- 2 HOUR RATED WALL
- 3 HOUR RATED WALL
- 4 HOUR RATED WALL

NUMBER — ELEMENT ID NUMBER
WIDTH — EGRESS WIDTH
FACTOR — EGRESS FACTOR
CAPACITY — EGRESS CAPACITY
LOAD — EGRESS LOAD

EXIT

- TYPE 'A' ACCESSIBLE APARTMENT UNIT

- ACCESSIBLE COMMUNICATION FEATURES APARTMENT UNIT

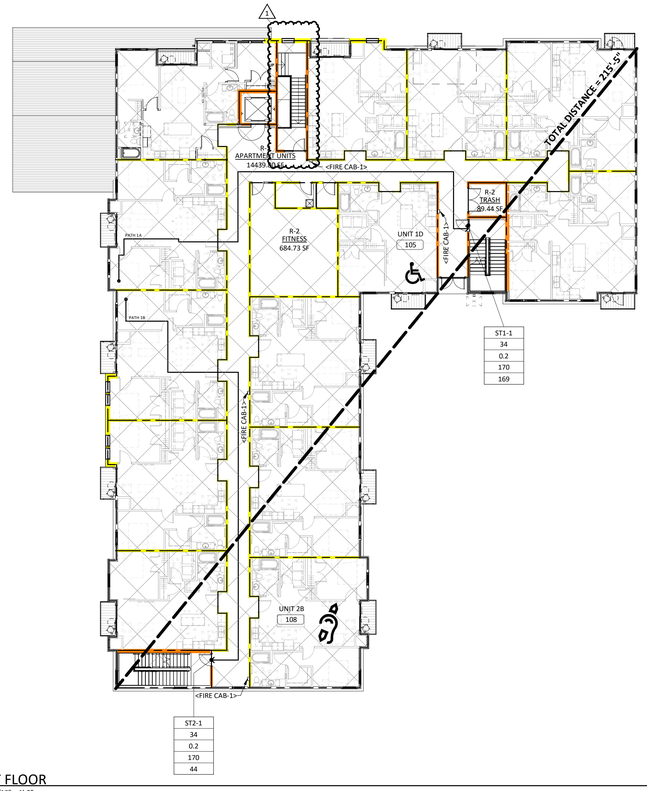

2A G110 FIRST FLOOR
SCALE: 1/16" = 1'-0"

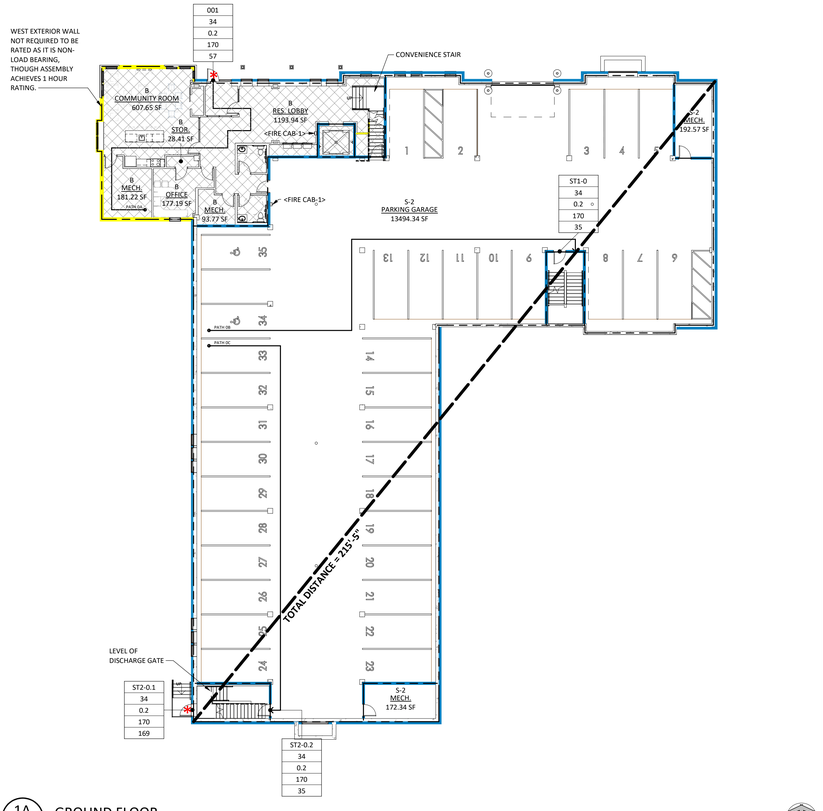

1A G110 GROUND FLOOR
SCALE: 1/16" = 1'-0"

FIRST FLOOR AREA SCHEDULE

NUMBER	NAME	AREA	OCCUPANCY CLASSIFICATION (IBC CHAPTER 3)	IBC CHAPTER 10					REMARKS
				FUNCTION OF SPACE	FLOOR AREA PER OCCUPANT	SF PER OCC. MEASUREMENT	OCCUPANT LOAD		
							FIXED SEATS	MAX. ALLOWABLE OCCUPANT LOAD	
R-2	APARTMENT UNITS	14,440 SF	R-2	RESIDENTIAL	200	GROSS	0	73	
R-2	FITNESS	685 SF	R-2	EXERCISE ROOM	50	GROSS	0	14	
R-2	TRASH	89 SF	R-2	ACCESSORY STORAGE, MECH EQUIPMENT ROOM	300	GROSS	0	1	
		15,214 SF					0	88	

GROUND FLOOR AREA SCHEDULE

NUMBER	NAME	AREA	OCCUPANCY CLASSIFICATION (IBC CHAPTER 3)	IBC CHAPTER 10					REMARKS
				FUNCTION OF SPACE	FLOOR AREA PER OCCUPANT	SF PER OCC. MEASUREMENT	OCCUPANT LOAD		
							FIXED SEATS	MAX. ALLOWABLE OCCUPANT LOAD	
B	RES. LOBBY	1,194 SF	B	BUSINESS AREA	100	GROSS	0	12	
B	COMMUNITY ROOM	608 SF	B	ASSEMBLY - W/O FIXED SEATING - UNCONCENTRATED	15	NET	0	41	
B	MECH.	181 SF	B	ACCESSORY STORAGE, MECH EQUIPMENT ROOM	300	GROSS	0	1	
B	OFFICE	177 SF	B	BUSINESS AREA	100	GROSS	0	2	
B	MECH.	94 SF	B	ACCESSORY STORAGE, MECH EQUIPMENT ROOM	300	GROSS	0	1	
B	STOR.	28 SF	B	ACCESSORY STORAGE, MECH EQUIPMENT ROOM	300	GROSS			
S-2	PARKING GARAGE	13,494 SF	S-2	PARKING GARAGES	200	GROSS	0	68	
S-2	MECH.	193 SF	S-2	ACCESSORY STORAGE, MECH EQUIPMENT ROOM	300	GROSS	0	1	
S-2	MECH.	172 SF	S-2	ACCESSORY STORAGE, MECH EQUIPMENT ROOM	300	GROSS	0	1	
		16,141 SF					0	127	

REVISION SCHEDULE

NO.	DESCRIPTION	DATE
1	PR 02	9/21/20

JLG architects
322 1st Ave N, Suite #600
Minneapolis, MN 55401
phone 6 1 2.7 4 6.4 2 6 0
facsimile 6 1 2.7 4 6.4 7 5 4
www.jlgarchitects.com

copyright © 2020

I HEREBY CERTIFY THAT THIS PLAN WAS PREPARED BY ME OR UNDER MY DIRECT SUPERVISION AND THAT I AM A DULY REGISTERED ARCHITECT UNDER THE LAWS OF THE STATE OF MINNESOTA

NICOLE WASHBURN, AIA — 46546 — 9/21/2020
NAME — REG. NO — DATE

LWO DEVELOPMENT, LLC
# EASTGATE APARTMENTS
OWATONNA, MN

DATE: 06/01/2020
PHASE: CONSTRUCTION DOCUMENTS
PROJECT: 18126
SHEET: G110
LIFE SAFETY PLANS

11/24/2020 12:04:23 PM

CODE / ZONING REVIEW

	TOPIC	IBC REFERENCE	RESPONSE
01 - BUILDING STATISTICS:			
1.010	Site / Lot Area		Lot 170104211; 0.212 acres Lot 170104212; 0.114 acres Lot 171220514; 0.518 acres Lot 171220501; 0.200 acres Lot 171220502; 0.200 acres Lot 171220513; 1.086 acres Lot 171220512; 0.271 acres Lot 171220511; 0.199 acres
1.020	Ground Building Area		16,449 SF
1.030	Level One Building Area		15,520 SF
1.040	Level Two Building Area		15,543 SF
1.050	Level Three Building Area		13,055 SF
1.060	Total Building Area		60,567 SF
1.070	Building Height		46'-10" from average grade plane to average roof plane of highest peak.
02 - ZONING / SITE REQUIREMENTS:			
2.010	Zoning District	OWATONNA ZONING	B-2 Community Business
2.020	Building Use	OWATONNA ZONING	Multi-family Housing
2.030	Density/FAR	OWATONNA ZONING	Minimum lot size of 1,700 s.f. per unit (61,200 s.f.)
2.040	Front Yard Setback	OWATONNA ZONING	30' - Structures in excess of 3 stories or 35 ft. are permitted as conditional uses. For each additional story over 3 stories or for each additional 10ft., and side yard setback requirements shall be increased 5ft.
2.050	Side Yard Setback	OWATONNA ZONING	10' - A side yard that directly abuts residential district shall be increased 10 additional feet over the minimum stated.15' required for conditional use.
2.060	Rear Yard Setback	OWATONNA ZONING	20'-0". Note: a varience has been applied for as 20'-0" has been exceeded.
2.070	Site Coverage Restrictions	OWATONNA ZONING	
2.080	Height Restrictions	OWATONNA ZONING	35' or 3 stories. 4 stories provided with a conditional use permit. For each additional story over 3 stories or for each additianl 10 ft. above the 35 ft., front and side yard setback requirements shall be increased 5 ft.
2.090	Parking Requirements	OWATONNA ZONING	A)30° parking requires 45.6 ft wall to wall min. width and 11 ft. isles 45° parking requires 52.5 ft wall to wall min. width and 13 ft. isles 60° parking requires 60.0 ft wall to wall min. width and 18 ft. isles 90° parking requires 62.0 ft wall to wall min. width and 24 ft. isles B)Multiple-family dwelling: studio and one bedroom require one stall per unit and two bedroom and greater require a minimum of two stalls per unit; and C)Elderly (senior citizen) housing: reservation of area equal to one parking space per unit. Initial development is, however, required of only one-half space per unit and said number of spaces can continue until such time as the City Council considers a need for additional parking spaces has been demonstrated.
2.100	Landscaping	OWATONNA ZONING	Business District. Screening from abutting residential districts shall be provided in the following instances: public utility buildings and structures, convenience food, car wash, motor fuel station, major auto repair, tire and battery stores and service, open and outdoor storage, service, sales and rentals, greenhouse and all open off-street parking areas of five or more spaces.
2.110	Possible Variances	OWATONNA ZONING	Rear setback less than 20 ft.
2.120	Other Notes / Requirements	OWATONNA ZONING	
03 - BUILDING CODE ANALYSIS - APPLICABLE GOVERNING CODES:			
3.010	Building Code		2020 MN State Building Code; Minnesota Rules, Chapter 1300 & 1305 (2018 IBC)
3.020	Fire Code		2020 MN State Fire Code
3.030	Mechanical Code		2020 MN State Mechanical and Fuel Gas Code
3.040	Energy Code		2015 Minnesota Energy Code
3.050	Plumbing Code		2015 Minnesota Plumbing Code
3.060	Electrical Code		2014 National Electrical Code with MN amendments; Effective date July 1st, 2014
3.070	Elevator Code		2015 MN State Elevator and Related Devices Code; MN Rules Chapter 1307.
3.080	Accessibility Code		2020 Minnesota Accessibility Code
3.090	Life Safety Code (NFPA)		
04 - BUILDING CLASSIFICATION AND LIMITATIONS:			
4.010	Occupancy Classification by Code	Chapter 3	R-2 Apartment houses S-2 Enclosed parking garage B Business (including assembly spaces with occupant load less than 50).
4.020	Occupancy Separation(s)	Table 508.3.3	S-2/R-2: Reduced to 1 hour for private vehicles (note b) S-2/B: Reduced to 1 hour for private vehicles (note b)
4.030	Non-Separated Uses	Section 508.3	1 N/A
4.040	Incidental Use Areas	Table 508.2	
4.050	Automatic Sprinkler System	Section 903.3.1.2	NFPA 13 within S-2 occupancy, per 903.2.10 NFPA 13R within R-2 and B occupancies.
4.060	Construction Type	Chapter 6	V-A
4.070	Buildings on the Same Lot	Section 903.3.1.2	N/A
4.080	Max. Allowable Area Basic Limit	Table 503	12,000 s.f. (based on most restrictive occupancy, R)
4.090	Allowable Area Increase for Frontage		20,466 s.f. allowable area with frontage increase
4.100	Allowable Area Increase for Sprinkler		
4.110	Area Increase Formula		W = 544 lf. (28') + 68 l.f. (30') /612 l.f. = 28.22' I = (612'/612' - .25)28.22/30 = 70.55% 12,000 x 70.55% = 8,466
4.120	Maximum Allowable Height Basic Limit	Table 503	R-2 – 4 stories, 60' (NFPA 13R) B – 3 stories, 50' (when not sprinklered NFPA 13)
4.130	Maximum Allowable Height with Modifications	Tables 504.3 and 504.4	None.
4.140	Is This a High Rise Classification	Section 403	No.
4.150	Separated Occupancies	Section 504	1 S-2, B, and R-2 separated occupancies.
4.160	Specail Requirments Based on Occupancy	Section 510.2	
05 - FIRE RESTRICTIVE REQUIREMENTS:			
5.010	Construction Type	Chapter 6	VA
5.020	Structural Frame	Table 601	1
5.030	Exterior Bearing Walls	Tabke 601	1 HR MIN – Not less than that required by Fire Separation Distance: Fire Separation Distance x Occupancy < 5 feetn/a > 5 feet, but < 10 feetn/a > 10 feet, but < 30 feet1 hour at east lot line > 30 feet0
5.040	Interior Bearing Walls	Table 601	1 (See also occupancy separations and other requirements for fire-resistance ratings)
5.050	Interior Supporting Roof Bearing Walls	Table 601	1 (See also occupancy separations and other requirements for fire-resistance ratings)
5.060	Nonbearing Exterior Walls	Table 601	0 (See also occupancy separations and other requirements for fire-resistance ratings)
5.070	Nonbearing Interior Walls	Table 601	0 (See also occupancy separations and other requirements for fire-resistance ratings)
5.080	Floor Construction	Table 601	1
5.090	Roof Construction	Table 601	1
5.100	Exterior Wall Projections	Section 702	1 Balconies and similar projections shall not be required to have sprinkled fire protection where non-combustible fire treated wood construction is provided per IBC 702.2.3.1.
5.110	Exterior Wall Openings	Section 705	70% at east lot line, unlimited elsewhere.
5.120	Exterior Wall Parapet	Section 705	None required.
5.130	Fire Walls	Section 705	None required.
5.140	Fire Barriers	Section 706	N/A
5.150	Shaft Enclosures	Section 707	2 hour (connecting 4 stories) Includes trash chute and trash room.
5.160	Elevator Lobby	Section 706	Not required. Hoistway opening protection required per 3006.3
5.170	Exit Enclosures	Section 1020.1	2 Hour
5.180	Exit Passageway	Section 1024	N/A
5.190	Horizontal Exit	Section 1026	N/A
5.200	Atriums		N/A
5.210	Incidental Use Areas	Section 508.2	N/A
5.220	Control Areas	Section 414.2.3	N/A
5.230	Separation of Mixed Occ.	Table 508.4	2 hour between S-2 and R-2; 2 hour between B and R-2
5.240	Exterior Walls	Section 704	1 hour bearing walls; 0 hour non-load bearing walls.
5.250	Fire Partitions	Section 708	See Life Safety Plans
5.260	Dwelling Unit Demising Walls	Section 420	1 Hour
5.270	Corridor Walls	Table 1020.1	1/2 Hour
5.280	Elevator Lobby Walls	Section 3006	N/A
5.290	Horizontal Assemblies	Section 711.1	2 hour between S-2 and R-2; 1 hour between each dwelling unit
5.300	Penetrations	Section 714	Firestopping as required.
5.310	Joint Systems	Section 713	Firestopping as required.
5.330	Opening Protectives	Section 715	Corridors: 20 min. 1-hour partitions: 45 min. 2-hour shafts: 90 min.
5.340	Ducts/Transfer Openings		As required
5.350	Concealed Spaces	Section 717	Fully insulated per NFPA 13 Section 8.15.1.2.7 (Verify NFPA 13R)
5.360	Fireblocking	Section 718.2	As required.
5.370	Draftstopping - Floor and Ceiling	Sections 708.4 & 717.3.2	At dwelling unit separations and one side of corridor.
5.380	Draftstopping in Attic	Section 717.4.2	Between every 2 units not exceeding 3,000 s.f. and one side of corridor.
06 - EGRESS REQUIREMENTS:			
6.010	Occupancy	Chapter 10	R-2, S-2, B
6.020	Occupant Load	Chapter 10	R-2: 203 B: 54 S-2: 68
6.030	Accessible Means of Egress	Chapter 10	Where more than one means of egress is req'd (by Section 1015.1 or 1019.1) from any accessible space, not less than two accessible means of egress are req'd.
6.040	Exit Stairways	Chapter 10	To be accessible means of egress, must have area of refuge.
6.050	Elevators	Chapter 10	See Code – special requirements such as standby power and area of refuge.
6.060	Minimum Ceiling Height	Chapter 10	7'-6" min.
6.070	Minimum Door Height Clearance	Chapter 10	80" min.
6.080	Stairway Width	Chapter 10	44" required, 46"actual (minimum).
6.090	Stairway Headroom	Chapter 10	80" min.
6.100	Max Height Between Landings	Chapter 10	12'-0"
6.110	Handrails	Chapter 10	Required both sides of stairs.
6.120	Stair Run/Rise	Chapter 10	11"min./7" max.
6.130	Ramps	Chapter 10	N/A
6.140	Common Path of Egress	Chapter 10	R-2: 125' B: 100' S-2: 100'
6.150	Exit Access	Chapter 10	2 required from each story.
6.160	Exit Access Travel Distance	Chapter 10	R-2: 250' max. B: 200' max. S-2: 300' max.
07 - ACCESSIBILITY:			
7.010	Building Entrances	Chapter 11	60% of building entrances must be accessible
7.020	Public Restrooms	Chapter 11	See Plumbing Chapter
7.030	Dwelling Unit Requirements	Chapter 11	2% of units are to be Type A accessible when more than 20 dwelling units are provided. All other units are to be Type B accessible.
7.040	Type Accessible Quantity	Chapter 11	N/A
7.050	Type A Quantity	Chapter 11	2 (5%) provided, plus all units to meet Universal Design standards per MHFA.
7.060	Type B Quantity	Chapter 11	34, plus all units to meet Universal Design standards. Refer to unit plans for designation of Option A or Option B Toilet Rooms.
7.070	Type C Quantity	Chapter 11	N/A
7.080	Communication Features		4 units required per IBC 2018

CODE / ZONING REVIEW

	TOPIC	IBC REFERENCE	RESPONSE
08 - INTERIOR ENVIRONMENT:			
8.010	Ventilation		See Mechanical
8.020	Temperature Control		System must provide 68 degree temp at a point 3ft above floor on the design heating day.
8.030	Lighting		See Electrical
8.040	Sound Transmission	Chapter 12	Common interior walls, partitions, and floor ceiling assemblies between adj dwelling units or between dwelling units and public spaces. Air-borne sound: STC > 50 STC (45 Field STC) – tested in accordance with ASTM E 90. Treat openings, penetrations, etc. to maintain rating (except entry doors). Structure-borne sound: IIC > 50 STC (45 Field IIC) – per ASTM E 492
8.050	Interior Space Dimensions		Refer to MHFA requirements in addition to IBC Chapter 12.
8.060	Access to Unoccupied Spaces		N/A
09 - ENERGY EFFICIENCY:			
9.010		Chapter 13	2015 COMMERCIAL ENERGY CODE FOR 4-STORY BUILDING.
10 - STRUCTURAL AND SPECIAL TESTING:			
10.010	Item Requiring Testing	Chapter 17	See Structural
10.020	Required Standard	Chapter 17	See Structural
10.030	Type of Inspector	Chapter 17	See Structural
10.040	Frequency	Chapter 17	See Structural
10.050	Responsible for Inspections	Chapter 17	See Structural
11 - PLUMBING FIXTURE REQUIREMENTS:			
11.010	Lavs (sinks)	Chapter 29	Men = 1 ; Women = 1
11.020	Water Closets (Toilets)	Chapter 29	Men = 1 ; Women = 1
11.030	Urinals	Chapter 29	
11.040	Drinking Fountains	Chapter 29	1

UNIT MATRIX

UNIT NAME	UNIT TYPE	UNIT SF	ACC. TYPE	TOTAL	1ST FLOOR	2ND FLOOR	3RD FLOOR	PERCENTAGE
UNIT 1A	1 BEDROOM	740 SF	TYPE B	3	1	1	1	22%
UNIT 1B	1 BEDROOM	770 SF	TYPE B	3	1	1	1	
UNIT 1C	1 BEDROOM	740 SF	TYPE B	1	1	-	-	
UNIT 1D	1 BEDROOM	746 SF	TYPE A	1	1	-	-	
UNIT 2A	2 BEDROOM	971 SF	TYPE B, OPT. A	8	2	3	3	78%
UNIT 2B	2 BEDROOM	1,003 SF	TYPE B, OPT. A	4	2	1	1	
UNIT 2C	2 BEDROOM	997 SF	TYPE B, OPT. A	6	2	2	2	
UNIT 2D	2 BEDROOM	1,065 SF	TYPE B, OPT. B	4	2	2	-	
UNIT 2E	2 BEDROOM	1,001 SF	TYPE B, OPT. B	2	1	1	-	
UNIT 2F	2 BEDROOM	988 SF	TYPE B, OPT. A	1	-	1	-	
UNIT 2G	2 BEDROOM	1,127 SF	TYPE B, OPT. B	1	-	-	1	
UNIT 2H	2 BEDROOM	1,222 SF	TYPE B, OPT. B	1	-	-	1	
UNIT 2I	2 BEDROOM	1,003 SF	TYPE A	1	-	1	-	
			TOTAL UNITS:	36	13	13	10	

NOTES:
- UNIT SF'S ARE CALCULATED USING THE EXTERIOR FACE OF SHEATHING, CENTER OF DEMISING WALL STUDS, AND CENTER OF CORRIDOR STUDS.
- 'TYPE A' UNIT ROOM NUMBERS ARE 105 & 212
- 5% OF UNITS ARE REQUIRED TO BE 'TYPE A' ACCESSIBLE. 5% OF 36 TOTAL UNITS IS 1.8 UNITS, OR 2 UNITS.
- UNITS 108, 202, 208, & 305: HEARING/VISION IMPAIRED UNITS.
- TOTAL OF APARTMENT UNITS WITH ACCESSIBLE COMMUNICATIONS FEATURES: 4 TOTAL UNITS (PER 2018 IBC TABLE E104.2.1)

SHEET MATERIAL ID LIST

MATERIAL ID	SPEC SECTION & DESCRIPTION
FIRE CAB-1	10 4400 - FIRE EXTINGUISHER CABINET

TRAVEL DISTANCE

Travel Distance	Path ID	Level
88'-9"	0A	
122'-6"	0B	
136'-1"	1A	
130'-5"	1B	
135'-3"	2A	
130'-1"	2B	
116'-4"	03	
135'-3"	3A	
135'-6"	3B	

LIFE SAFETY LEGEND

- 1 HOUR RATED WALL
- 1 HOUR RATED WALL (SMOKE)
- 2 HOUR RATED WALL
- 3 HOUR RATED WALL
- 4 HOUR RATED WALL

NUMBER — ELEMENT ID NUMBER
WIDTH — EGRESS WIDTH
FACTOR — EGRESS FACTOR
CAPACITY — EGRESS CAPACITY
LOAD — EGRESS LOAD

EXIT

- TYPE 'A' ACCESSIBLE APARTMENT UNIT

- ACCESSIBLE COMMUNICATION FEATURES APARTMENT UNIT

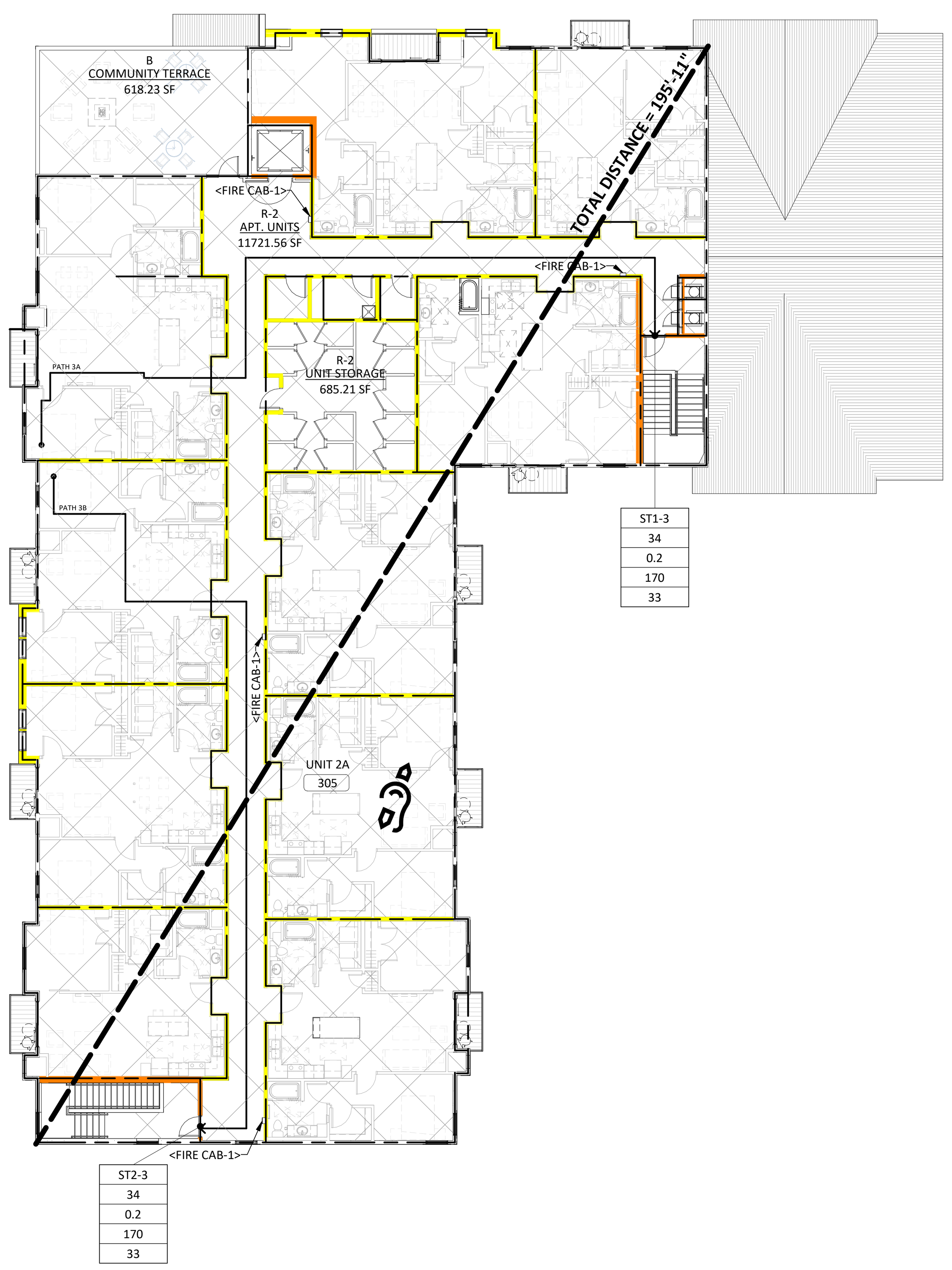

2A G111 THIRD FLOOR
SCALE: 1/16" = 1'-0"

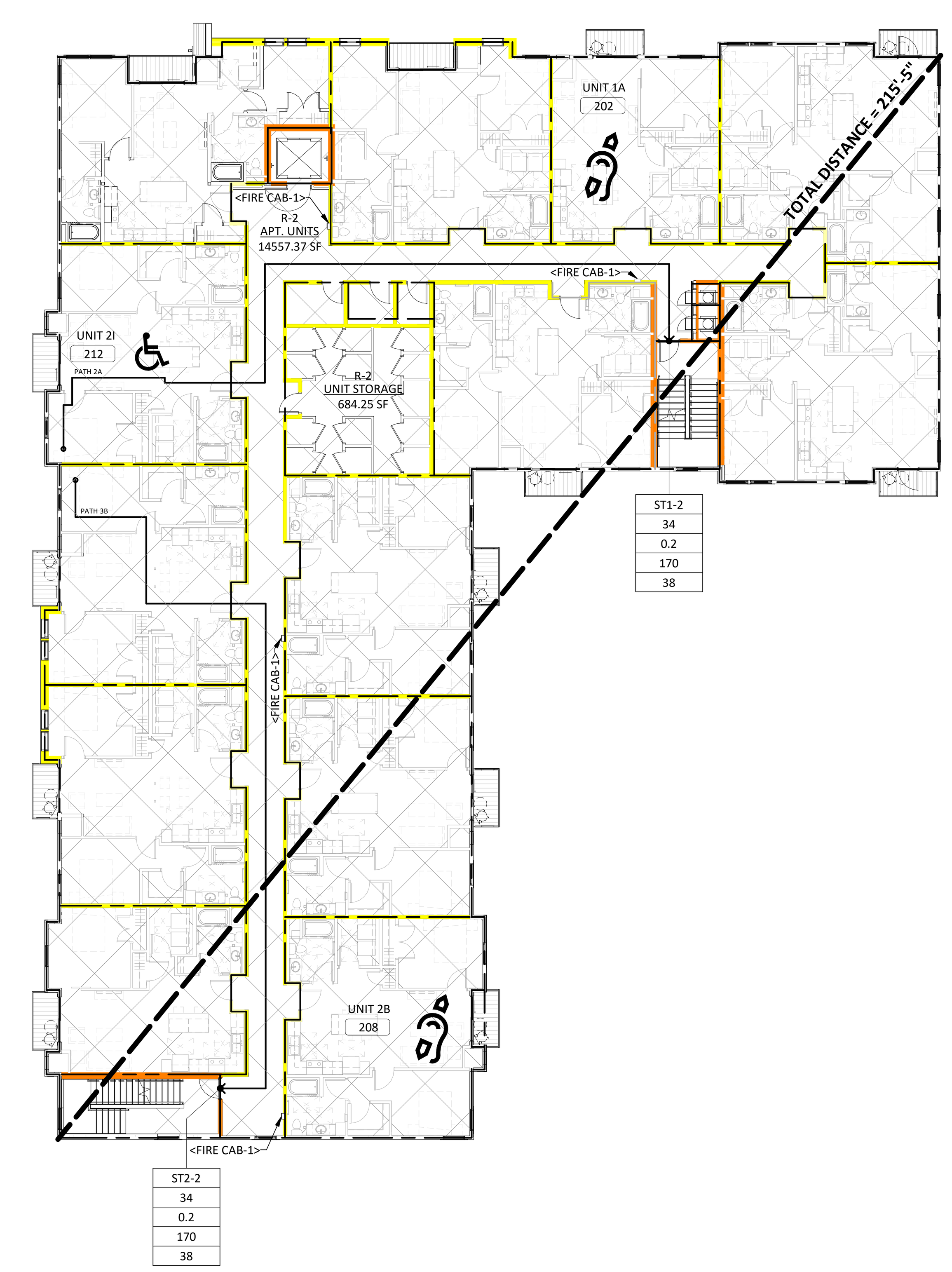

1A G111 SECOND FLOOR
SCALE: 1/16" = 1'-0"

THRID FLOOR FLOOR AREA SCHEDULE

NUMBER	NAME	AREA	OCCUPANCY CLASSIFICATION (IBC CHAPTER 3)	IBC CHAPTER 10: FUNCTION OF SPACE	FLOOR AREA PER OCCUPANT	SF PER OCC. MEASUREMENT	OCCUPANT LOAD: FIXED SEATS	MAX. ALLOWABLE OCCUPANT LOAD	REMARKS
B	COMMUNITY TERRACE	618 SF	R-2	ASSEMBLY - W/O FIXED SEATING - UNCONCENTRATED	15	NET	0	42	
R-2	UNIT STORAGE	685 SF	R-2	ACCESSORY STORAGE, MECH EQUIPMENT ROOM	300	GROSS	0	3	
R-2	APT. UNITS	11,722 SF	R-2	RESIDENTIAL	200	GROSS	0	59	
		13,025 SF					0	104	

SECOND FLOOR FLOOR AREA SCHEDULE

NUMBER	NAME	AREA	OCCUPANCY CLASSIFICATION (IBC CHAPTER 3)	IBC CHAPTER 10: FUNCTION OF SPACE	FLOOR AREA PER OCCUPANT	SF PER OCC. MEASUREMENT	OCCUPANT LOAD: FIXED SEATS	MAX. ALLOWABLE OCCUPANT LOAD	REMARKS
R-2	UNIT STORAGE	684 SF	R-2	ACCESSORY STORAGE, MECH EQUIPMENT ROOM	300	GROSS	0	3	
R-2	APT. UNITS	14,557 SF	R-2	RESIDENTIAL	200	GROSS	0	73	
		15,242 SF					0	76	

JLG architects
322 1st Ave N, Suite #600
Minneapolis, MN 55401
phone 6 1 2.7 4 6.4 2 6 0
facsimile 6 1 2.7 4 6.4 7 5 4
www.jlgarchitects.com

copyright © 2020

REVISION SCHEDULE

NO.	DESCRIPTION	DATE
1	PR 02	9/21/20

I HEREBY CERTIFY THAT THIS PLAN WAS PREPARED BY ME OR UNDER MY DIRECT SUPERVISION AND THAT I AM A DULY REGISTERED ARCHITECT UNDER THE LAWS OF THE STATE OF MINNESOTA

NICOLE WASHBURN, AIA | 46546 REG. NO | 9/21/2020 DATE

LWO DEVELOPMENT, LLC
EASTGATE APARTMENTS
OWATONNA, MN

DATE
06/01/2020
PHASE
CONSTRUCTION DOCUMENTS
PROJECT
18126
SHEET
G111
LIFE SAFETY PLANS

11/24/2020 12:04:48 PM

MOUNTING HEIGHT...

Value	Note
1	CONTROLS FOR FLUSH VALVES SHALL BE MOUNTED ON THE WIDE SIDE (ACCESSIBLE) OF TOILET AREAS NO MORE THAN 44 IN ABOVE THE FLOOR.
2	INSTALL TOILET PAPER DISPENSERS 19" TO CENTERLINE OF DISPENSER ABOVE FINISHED FLOOR. DISPENSERS THAT CONTROL DELIVERY ARE NOT PERMITTED.
3	HATCHED OR DASHED SPACE INDICATEDS REQUIRED CLEAR FLOOR SPACE.
4	DOORWAYS SHALL HAVE A MINIMUM CLEAR OPENING OF 32 IN WITH THE DOOR OPEN 90 DEGREES, MEASURED BETWEEN THE FACE OF THE DOOR AND STOP.
5	HANDLES, PULLS, LATCHES, LOCKS AND OTHER OPERATING DEVICES ON ACCESSIBLE DOORS SHALL HAVE A SHAPE THAT IS EASY TO GRASP WITH ONE HAND AND DOES NOT REQUIRE TIGHT GRASPING, TIGHT PINCHING, OR TWISTING OF THE WRIST TO OPERATE. LEVER OPERATED MECHANISMS, PUSH-TYPE MECHANISMS, AND U-SHAPED HANDLES ARE ACCEPTABLE DESIGNS.
6	GRAB BARS SHALL BE PROVIDED AT ALL ACCESSIBLE TOILET AREAS. MOUNT AT HEIGHT SHOWN AND DO NOT OBSTRUCT ANY REQUIRED CLEARANCES.
7	A CLEAR FLOOR SPACE OF 30IN BY 48IN SHALL BE PROVIDED TO ALLOW FORWARD APPROACH. URINAL SHIELDS THAT DO NOT EXTEND BEYOND THE FRONT END OF THE URINAL RIM MAY BE PROVIDED WITH 29 IN CLEARANCE BETWEEN THEM.
8	URINALS SHALL BE WALL-HUNG WITH AN ELONGATED RIM AT A MAXIMUM OF 17 IN ABOVE THE FLOOR.
9	FLUSH CONTROLS SHALL BE HAND OPERATED OR AUTOMATIC AND MOUNTED NO MORE THAN 44 IN ABOVE THE FLOOR.
10	CONTROLS
11	A CLEAR FLOOR SPACE OF 30IN BY 48IN SHALL BE PROVIDED TO ALLOW FORWARD APPROACH.
12	HOT WATER AND DRAIN PIPES UNDER LAVATORIES SHALL BE INSULATED OR OTHERWISE COVERED. THERE SHALL BE NO SHARP OR ABRASIVE SURFACES UNDER LAVATORIES.
14	SHOWER STALL SIZE SHALL BE 36IN BY 36IN MINIMUM. CLEAR FLOOR SPACE SHALL BE 36IN MINIMUM IN DWELLING UNIT.
15	A SEAT SHALL BE PROVIDED IN SHOWER STALLS 36IN BY 36IN AS INDICATED ABOVE. THE SEAT SHALL BE ON THE WALL OPPOSITE THE CONTROLS. STRUCTURAL STRENGTH OF SEATS AND THE ATTACHEMENT MUST COMPLY WITH CODE.
16	A SHOWER SPRAY UNIT WITH A HOSE AT LEAST 60IN LONG THAT CAN BE USED BOTH AS A FIXED SHOWER HEAD AND AS A HAND-HELD SHOWER SHALL BE PROVIDED.

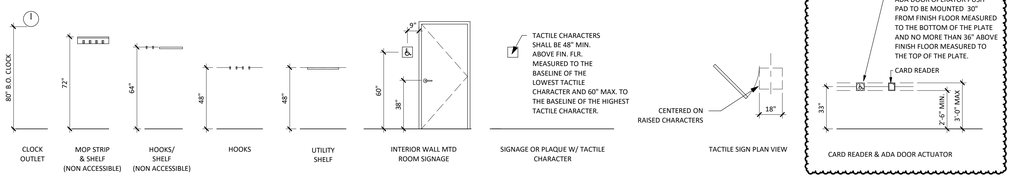

MOUNTING HEIGHTS - MISCELLANEOUS

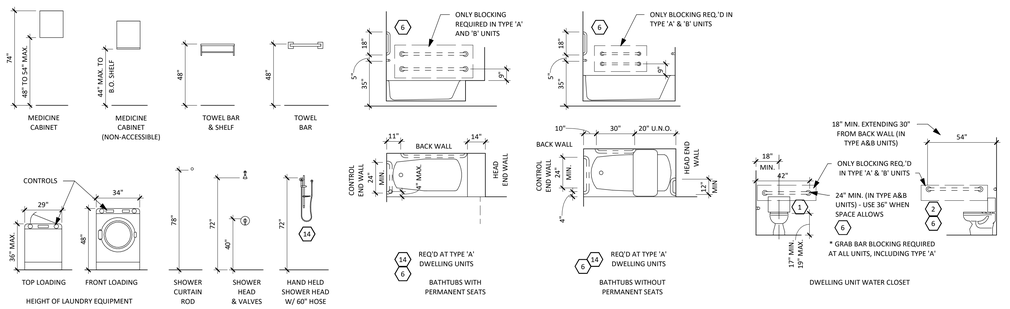

MOUNTING HEIGHTS - RAILING EXTENSIONS

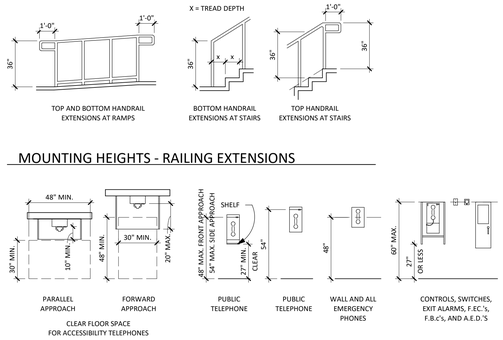

MOUNTING HEIGHTS - TYPICAL VANITIES

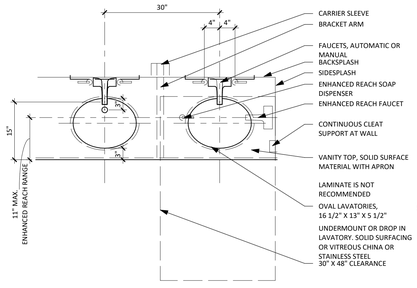

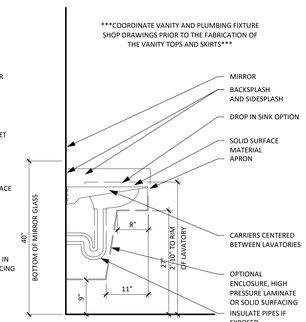

MOUNTING HEIGHTS - RESIDENTIAL

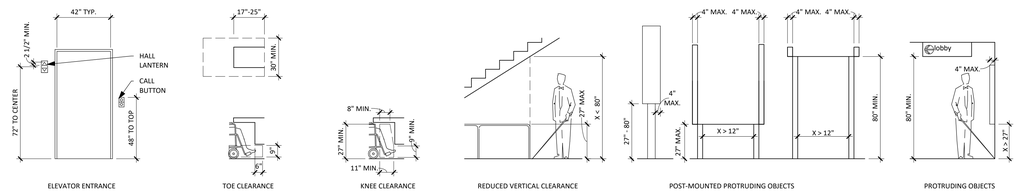

MOUNTING HEIGHTS - COMMUNICATIONS

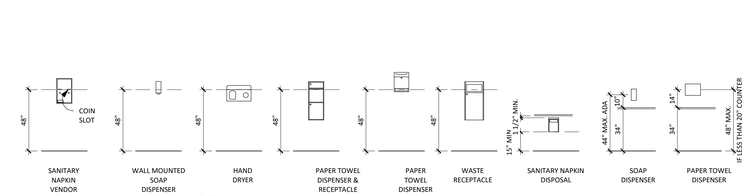

WATER CLOSET TYPES

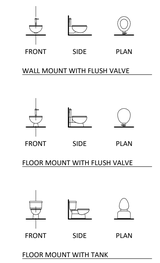

MOUNTING HEIGHTS AND HORIZONTAL CLEARANCES

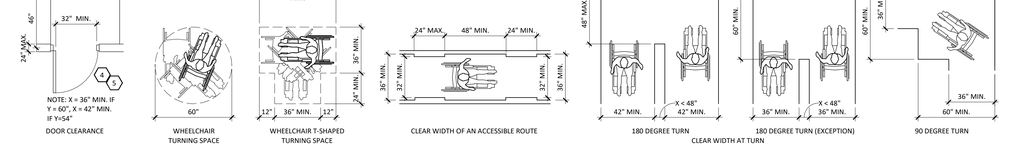

MOUNTING HEIGHTS - TOILET ROOMS

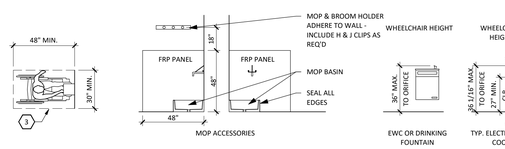

WATER CLOSET TYPES

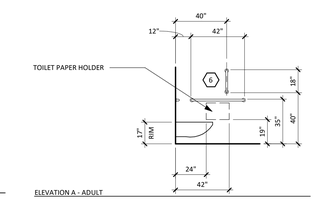

MOUNTING HEIGHTS - REACHES

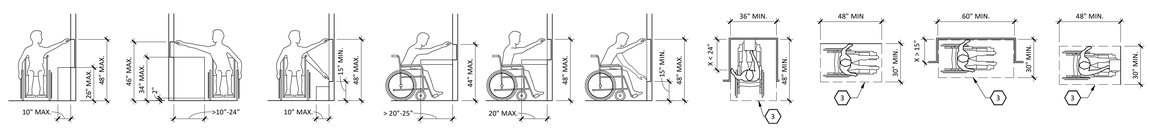

MOUNTING HEIGHTS - MISCELLANEOUS PLUMBING

MOUNTING HEIGHTS - FIRE PROTECTION

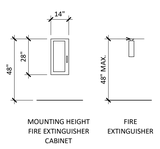

MOUNTING HEIGHTS - TOILETS AND GRAB BARS

JLG architects
322 1st Ave N, Suite #600
Minneapolis, MN 55401
phone 6 1 2 7 4 6 4 2 6 0
facsimile 6 1 2 7 4 6 4 7 5 4
www.jlgarchitects.com

copyright © 2020

REVISION SCHEDULE

NO.	DESCRIPTION	DATE
1	PR 02	9/21/20

I HEREBY CERTIFY THAT THIS PLAN WAS PREPARED BY ME OR UNDER MY DIRECT SUPERVISION AND THAT I AM A DULY REGISTERED ARCHITECT UNDER THE LAWS OF THE STATE OF MINNESOTA

NICOLE WASHBURN, AIA

46546 — REG. NO

9/21/2020 — DATE

LWO DEVELOPMENT, LLC

EASTGATE APARTMENTS

OWATONNA, MN

DATE
06/01/2020

PHASE
CONSTRUCTION DOCUMENTS

PROJECT
18126

SHEET
G120
MOUNTING HEIGHTS

11/24/2020 3:09:25 PM

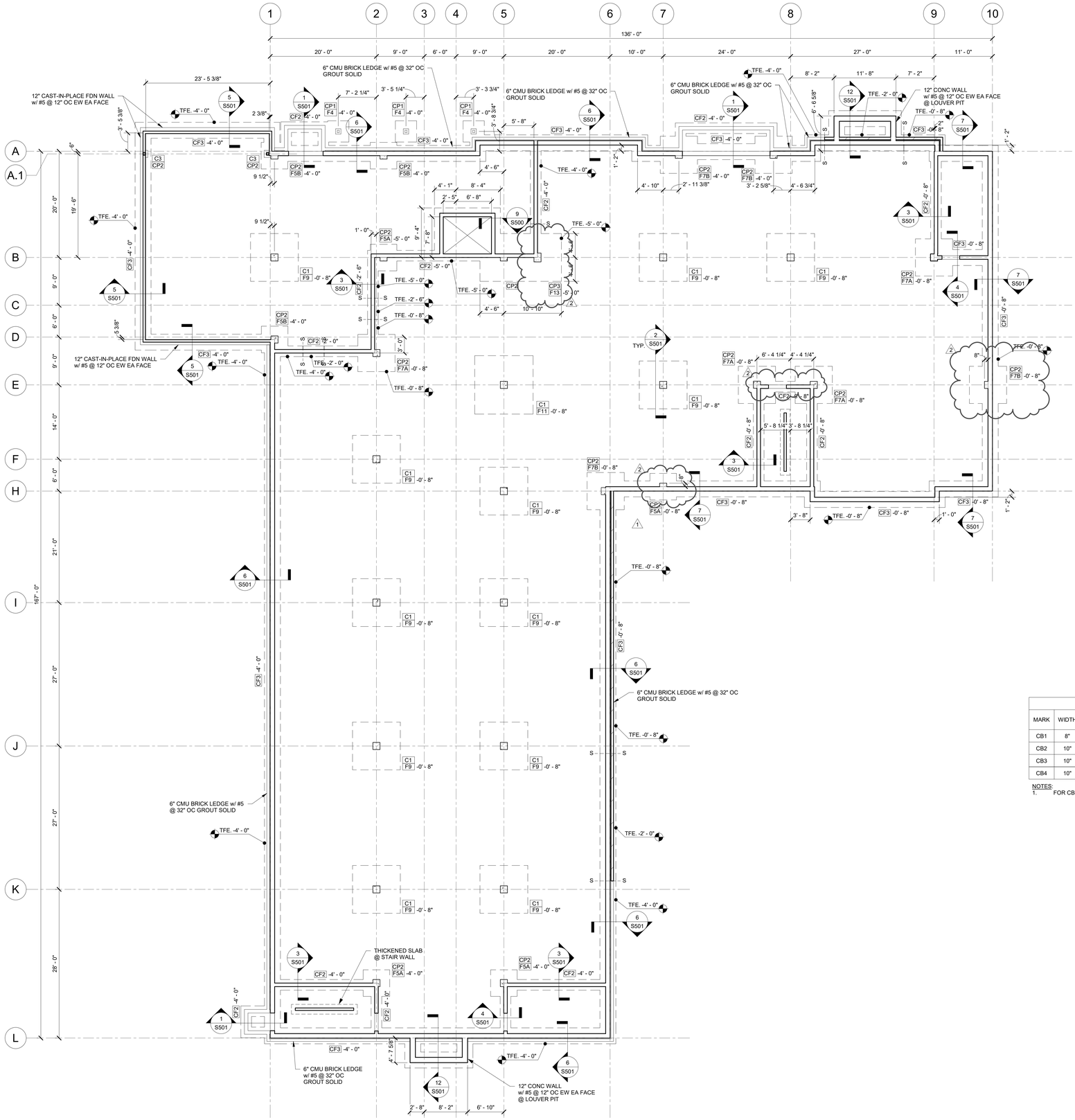

1 S100 FOUNDATION PLAN
1/8" = 1'-0"

FOOTING & FOUNDATION PLAN NOTES: (TYPICAL UNO)

1. TOP OF CONCRETE FLOOR EL. 0'-0" DATUM EL. 1143.00'.
2. TOP OF INTERIOR COLUMN PAD FOOTINGS TO BE EL. -0'-8", TOP OF EXTERIOR COLUMN & CONTINUOUS STRIP FOOTINGS TO BE EL. SEE PLAN.
3. S------S INDICATES STEP FOOTING LOCATIONS, SEE DETAIL 2 / S500
4. C.J. INDICATES SLAB CONTROL JOINT PATTERN, TO BE MAX. 15'x15' PATTERN. SEE 10 / S500 FOR TYPICAL SLAB CONSTRUCTION JOINT DETAIL.
5. FOR COLUMN ISOLATION JOINT SEE DTL 11 / S500 .
6. F1, CF1, P1, CP1 & C1 INDICATE FOOTINGS, CONTINOUS FOOTING, PIER, CONC. PILASTER & COLUMN DESIGNATIONS, SEE SCHEDULES.
7. CONCRETE SLAB ON GRADE TO BE 5" w/ (6x6-W2.9 x W2.9 WWF) OVER COMPACTED GRANULAR BASE. (SEE SOILS REPORT).
8. FOR CONC SLAB REINFORCING SEE DETAILS 13 / S500 & 14 / S500 .
9. EXTERIOR FOUNDATION WALL TO BE 10" CAST-IN-PLACE w/ #5 @ 12" OC EW. EA FACE INTERIOR CONC. WALLS TO BE 8" CAST-IN-PLACE w/ #5 @ 16" OC VERT & #5 @ 12" OC HORIZ.
10. SEE 4 / S500 - 7 / S500 FOR FOUNDATION WALL REINFORCING DETAILS.
11. SEE 1 / S500 & 2 / S500 FOR FOOTING REINFORCING DETAILS.
12. CONTRACTOR TO VERIFY FOUNDATION ELEVATIONS AND STEP LOCATIONS WITH FINAL GRADES.
13. PILASTER OR PIERS SHOWN WITHIN CONC. WALLS ARE TO EXTEND FROM BEAM/GIRDER BEARING TO TOP OF FTG. OR FOUNDATION WALL PILASTER.
14. SEE 3 / S500 FOR MEP PIPE SLEEVES UNDER FOOTING & FOUNDATION DETAILS.
15. SEE 8 / S500 FOR CONCRETE WALL OPENING DETAIL.
16. SEE 15 / S500 FOR HOUSEKEEPING PAD @ SLAB ON GRADE.
17. SEE 12 / S500 FOR SLAB ON GRADE OPEINING & CORNER REINFORCING DETAILS.
18. SEE 16 / S500 - 19 / S500 FOR CMU/BOND BEAM REINF, LOW LIFT GROUT & REBAR POSITIONEERS SECTIONS & DETAILS.
19. SEE MECHANICAL & ELECTRICAL PLANS FOR ANY & ALL LOCATIONS OF SLEEVED OPENINGS IN FOUNDATION WALLS.
20. GENERAL CONTRACTOR TO FIELD VERIFY ALL EXISTING STRUCTURE DIMENSIONS, ELEVATIONS, CONDITIONS, ETC., PRIOR TO COMMENCING WORK OF ADDING NEW STRUCTURE OR CONNECTING TO EXISTING STRUCTURE. IF ANY OF THESE ARE DIFFERENT FROM SHOWN HERE OR IN DETAILS, CONTACT ENGINEER FOR REVIEW. COMMENTS OR REDESIGN IF NECESSARY.

CONCRETE FOOTING SCHEDULE

MARK	LENGTH	WIDTH	THICKNESS	REINFORCING	REMARKS
CF2		2' - 0"	1' - 6"	(2) #5 CONT	
CF3		3' - 0"	2' - 0"	(3) #5 CONT & #4 TRANS @ 4'-0" OC	
F4	4' - 0"	4' - 0"	1' - 6"	(5) #5 EW BOT	
F5A	5' - 0"	5' - 0"	1' - 6"	(6) #5 EW BOT	
F5B	5' - 0"	5' - 0"	2' - 0"	(6) #5 EW BOT	
F7A	7' - 0"	7' - 0"	1' - 6"	(9) #5 EW BOT	
F7B	7' - 0"	7' - 0"	2' - 0"	(9) #5 EW BOT	
F9	9' - 0"	9' - 0"	1' - 6"	(8) #8 EW BOT	
F11	11' - 0"	11' - 0"	2' - 0"	(10) #8 EW BOT	
F13	13' - 10"	23' - 11"	2' - 0"		SEE PLAN

PRECAST/STEEL COLUMN SCHEDULE

MARK	SIZE	BASE PLATE TYPE	ANCHOR BOLT	REMARKS
C1	16 x 16 PRE-CAST			
C2	HSS5X5X1/2	3/4"x12"x1'-0"	4 - 3/4"x8"	EPOXY/GROUT. SEE 14/S711
C3	PSL 5 1/4 x 5 1/4	SIMPSON ABA66Z		PACK w/ HIGH STRENGTH GROUT UNDER 1" STANDOFF
CP1	12 x 12 CAST-IN-PLACE			(4) #5 VERT BAR & #4 STIRRUPS @ 12" OC
CP2	16 x 16 CAST-IN-PLACE			(4) #8 VERT & #4 STIRRUPS @ 16" OC. (3) #4 STIRRUPS @ 3" OC T&B
CP3	16 x 20 CAST-IN-PLACE			(4) #8 VERT & #4 STIRRUPS @ 16" OC. (3) #4 STIRRUPS @ 3" OC T&B

CIP CONCRETE EXTERIOR OPENING SCHEDULE

MARK	WIDTH	DEPTH	TOP LONG REINF	BOT LONG REINF	TYP STIRRUPS	STIRRUPS @ ENDS	DISTANCE FROM BEAM END FOR END STIRRUPS	REMARKS
CB1	8"	23"	(2) #5	2 ROWS OF (2) #5	NOT REQ	NOT REQ	N/A	INTERIOR OPENINGS
CB2	10"	11"	(2) #5	2 ROWS OF (2) #5	NOT REQ	NOT REQ	N/A	MAN DOOR @ L.1
CB3	10"	23"	(2) #5	2 ROWS OF (2) #5	#3 @ 10" OC	#3 @ 6" OC	2'-0" (SEE NOTES BELOW)	OPENINGS BTWN 3'-0" TO 7'-0" EXT
CB4	10"	37"	(2) #5	2 ROWS OF (3) #5	#3 @ 10" OC	#3 @ 4" OC	2'-0"	OPENINGS GREATER THAN 7'-0" @ EXT

NOTES:
1. FOR CB3 STIRRUPS ARE ONLY REQUIRED FOR LINTELS GREATER THAN 5'-0".

JLG architects
322 1st Ave N, Suite #600
Minneapolis, MN 55401
phone 612.746.4260
facsimile 612.746.4754
www.jlgarchitects.com

copyright © 2018

REIGSTAD
192 West 9th Street #200
Saint Paul, Minnesota 55102
Ph. 651.292.1125 Fax. 651.292.9065
14368 Creosote Road
Gulfport, Mississippi 39503
Ph. 228.868.0771 Fax. 228.868.0772

I hereby cetify that this plan, specification, or report was prepared by me or under my direct supervision and that I am a duly licened Engineer under the laws of the state of Minnesota.

Signed: Yendranata
Name: Yendranata
License No.: 40876

REVISION SCHEDULE

NO.	DESCRIPTION	DATE
1	ADDENDUM 01	06/30/2020
2	PROPOSAL REQUEST 02	09/21/2020

LWO DEVELOPMENT, LLC
EASTGATE APARTMENTS
OWATONNA, MN

DATE 06/19/2020
PHASE CONSTRUCTION DOCUMENTS
PROJECT 20.033.00
SHEET S100
FOOTING & FOUNDATION PLAN

11/20/2020 1:21:10 PM

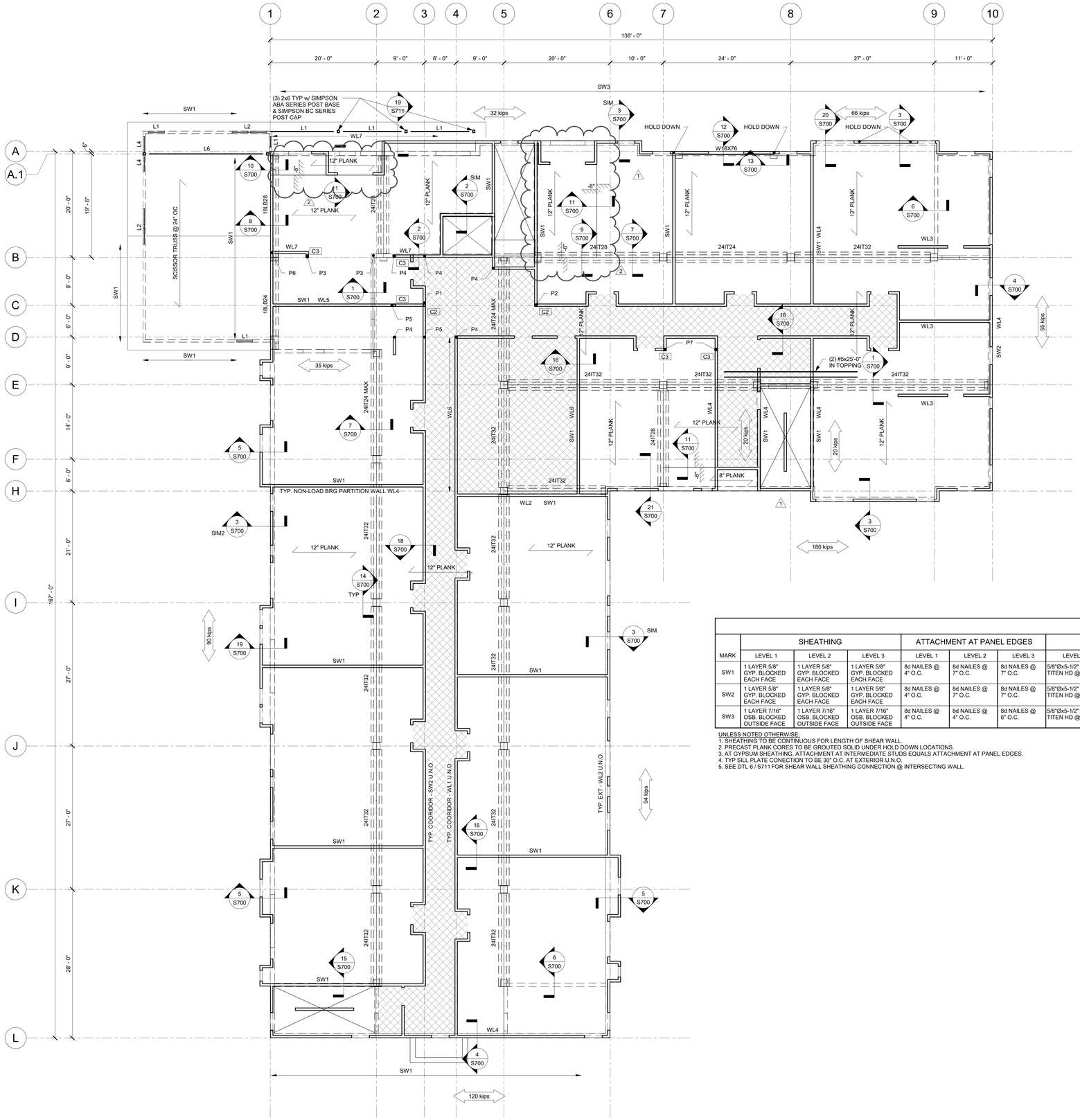

1 S101 LVL 1 FRAMING PLAN
1/8" = 1'-0"

FIRST FLOOR FRAMING PLAN NOTES: (TYPICAL UNO)

1. TOP OF 2" TOPPING AT NOMINAL EL. 10'-5". TOP OF PLANK EL = 10'-3" (UNO).
2. TOPPING TO BE NORMAL WEIGHT CONCRETE, REINFORCED w/ 6x6-W2.9xW2.9 WWF CENTERED IN TOPPING.
3. DESIGN OF PRECAST MEMBERS AND CONNECTIONS SHALL INCLUDE LOADING AND RESTRAINT CONDITIONS FROM INITIAL FABRICATION TO END USE INCLUDING FORM REMOVAL, STORAGE, FABRICATION AND ERECTION.
4. DESIGN OF ALL PRECAST ELEMENTS AND CONNECTIONS INCLUDING CONNECTION DETAILS BETWEEN PRECST CONCRETE AND CAST-IN-PLACE CONCRETE, PRECAST TO PRECAST AND ANY STEEL MEMBERS ARE THE RESPONSIBILITY OF THE PRECAST SUPPLIER.
5. STRUCTURE IS UNSTABLE UNTIL ALL CONNECTIONS ARE COMPLETE.
6. LOCATION AND SPACING OF TEMPORARY SHORES TO BE DETERMINED BY THE COORDINATED EFFORTS OF THE CONTRACTOR AND SUPPLIER.
7. ALL STEEL MEMBERS TO BE A572 - GRADE 50 UNO.
8. UNO ALL NON-CONTINUOUS BEAMS TO HAVE SHEAR CONNECTIONS DESIGNED BY THE FABRICATOR. SEE STRUCTURAL NOTES FOR BOLT SIZE & QUANTITY.
9. GENERAL CONTRACTOR TO VERIFY SIZE, LOADING AND LOCATION OF ALL MECHANICAL UNITS.
10. LX ON PLAN INDICATES LINTELS, SEE LINTEL SCHEDULE FOR SIZE AND REINFORCING.
11. XX kips — DENOTES IN-PLANE SHEAR WALL LFRD LOAD DUE TO WIND AND LATERAL EARTH EARTH PRESSURES. PRECASTER TO DESIGN DIAPHRAGM CAPABLE TO DELIVER SHEAR LOADS TO SHEAR WALLS.
12. CONTRACTOR TO FIELD VERIFY ALL EXISTING STRUCTURE DIMENSIONS, ELEVATIONS, CONDITIONS, ETC., PRIOR TO COMMENCING WORK OF ADDING NEW STRUCTURE OR CONNECTING TO EXISTING STRUCTURE. IF ANY OF THESE ARE DIFFERENT FROM SHOWN HERE OR IN DETAILS, CONTACT ENGINEER FOR REVIEW, COMMENTS OR REDESIGN IF NECESSARY.

WALL LOAD AND POINT LOAD SCHEDULE

MARK	DEAD LOAD	FLOOR LIVE LOAD	SNOW LOAD	COMMENTS
WL1	2.3 KLF	1.8 KLF	0.9 KLF	
WL2	2.1 KLF	1.5 KLF	0.9 KLF	
WL3	1.5 KLF	0.7 KLF	0.8 KLF	
WL4	0.5 KLF	0.3 KLF	0.3 KLF	
WL5	0.8 KLF	1.1 KLF	0.2 KLF	
WL6	1.2 KLF	3.1 KLF	0.2 KLF	
WL7	1.3 KLF	1.7 KLF	0.9 KLF	
P1	5K	10K	3K	
P2	20K	17K	7K	
P3	8K	12K	6K	NON-REDUCIBLE
P4	3.5K	6K		
P5	6K	10K		
P6	9K	4K	10K	
P7	11.5K	9K	4.5K	

UNLESS NOTED OTHERWISE:
1. POINT LOADS AT EA SIDE OF OPENING IS WALL LOAD LISTED ABOVE MULTIPLIED BY 1/2 THE WIDTH OF THE OPENING.
2. LOADS ARE REDUCIBLE PER ASCE 7.

SUPERIMPOSED UNIFORM LOAD TABLE

MARK	DEAD LOAD (PSF)	LIVE LOAD (PSF)	COMMENTS
1	2" TOPPING + 20 PSF	40 PSF	
2	2" TOPPING + 20 PSF	100 PSF	PUBLIC SPACE

WOOD SHEAR WALL SCHEDULE

MARK	SHEATHING			ATTACHMENT AT PANEL EDGES			SILL PLATE CONNECTION			END OF WALL JAMBS			HOLD DOWN			END VERT FORCE
	LEVEL 1	LEVEL 2	LEVEL 3	LEVEL 1	LEVEL 2	LEVEL 3	LEVEL 1	LEVEL 2	LEVEL 3	LEVEL 1	LEVEL 2	LEVEL 3	LEVEL 1	LEVEL 2	LEVEL 3	
SW1	1 LAYER 5/8" GYP. BLOCKED EACH FACE	1 LAYER 5/8" GYP. BLOCKED EACH FACE	1 LAYER 5/8" GYP. BLOCKED EACH FACE	8d NAILES @ 4" O.C.	8d NAILES @ 7" O.C.	8d NAILES @ 7" O.C.	5/8"Øx5-1/2" SIMPSON TITEN HD @ 30" O.C.	(2) 10d NAILS @ 6" O.C.	(2) 10d NAILS @ 12" O.C.	(3) 2x6	(3) 2x6	(2) 2x6	SIMPSON HDU2 - SDS2.5	SIMPSON CS16	SIMPSON CS16	-2K/+8K
SW2	1 LAYER 5/8" GYP. BLOCKED EACH FACE	1 LAYER 5/8" GYP. BLOCKED EACH FACE	1 LAYER 5/8" GYP. BLOCKED EACH FACE	8d NAILES @ 4" O.C.	8d NAILES @ 7" O.C.	8d NAILES @ 7" O.C.	5/8"Øx5-1/2" SIMPSON TITEN HD @ 48" O.C.	(2) 10d NAILS @ 12" O.C.	(2) 10d NAILS @ 12" O.C.	(5) 2x6	(4) 2x6	(3) 2x6	N/A	N/A	N/A	+18K
SW3	1 LAYER 7/16" OSB. BLOCKED OUTSIDE FACE	1 LAYER 7/16" OSB. BLOCKED OUTSIDE FACE	1 LAYER 7/16" OSB. BLOCKED OUTSIDE FACE	8d NAILES @ 4" O.C.	8d NAILES @ 4" O.C.	8d NAILES @ 6" O.C.	5/8"Øx5-1/2" SIMPSON TITEN HD @ 24" O.C.	(2) 10d NAILS @ 6" O.C.	(2) 10d NAILS @ 6" O.C.	(3) 2x6	(3) 2x6	(2) 2x6	SIMPSON HDU2 - SDS2.5	SIMPSON CS16	SIMPSON CS16	+11K

UNLESS NOTED OTHERWISE:
1. SHEATHING TO BE CONTINUOUS FOR LENGTH OF SHEAR WALL.
2. PRECAST PLANK CORES TO BE GROUTED SOLID UNDER HOLD DOWN LOCATIONS.
3. AT GYPSUM SHEATHING, ATTACHMENT AT INTERMEDIATE STUDS EQUALS ATTACHMENT AT PANEL EDGES.
4. TYP SILL PLATE CONECTION TO BE 30" O.C. AT EXTERIOR U.N.O.
5. SEE DTL 6 / S711 FOR SHEAR WALL SHEATHING CONNECTION @ INTERSECTING WALL.

JLG architects
322 1st Ave N, Suite #600
Minneapolis, MN 55401
phone 6 1 2 7 4 6 4 2 6 0
facsimile 6 1 2 7 4 6 4 7 5 4
www.jlgarchitects.com
copyright © 2018

REIGSTAD
192 West 9th Street #200
Saint Paul, Minnesota 55102
Ph. 651.292.1125 Fax. 651.292.9065
14368 Creosote Road
Gulfport, Mississippi 39503
Ph. 228.868.0771 Fax. 228.868.0772

I hereby cetify that this plan, specification, or report was prepared by me or under my direct supervision and that I am a duly licened Engineer under the laws of the state of Minnesota.

Signed: Yendranata
Name: Yendranata
License No.: 40876

REVISION SCHEDULE

NO.	DESCRIPTION	DATE
1	ADDENDUM 01	06/30/2020
2	PROPOSAL REQUEST 02	09/21/2020

LWO DEVELOPMENT, LLC
# EASTGATE APARTMENTS
OWATONNA, MN

DATE 06/19/2020
PHASE CONSTRUCTION DOCUMENTS
PROJECT 20.033.00
SHEET S101
LEVEL 1 FRAMING PLAN

11/20/2020 1:21:11 PM

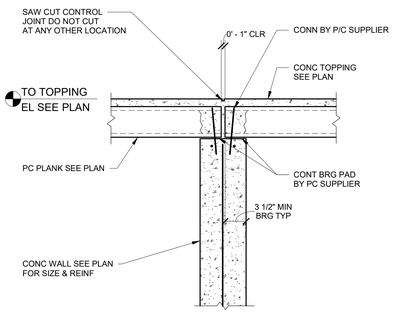

1 S700 SECTION - PLANK BEARING BOTH SIDES OF CONC WALL
3/4" = 1'-0"

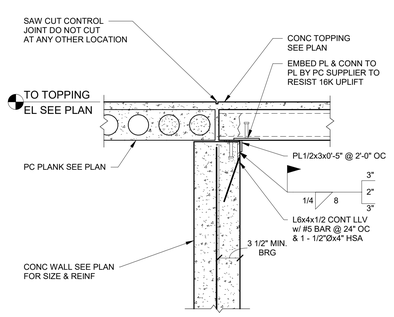

2 S700 SECTION - PLANK BEARING & LAP @ CONC WALL
3/4" = 1'-0"

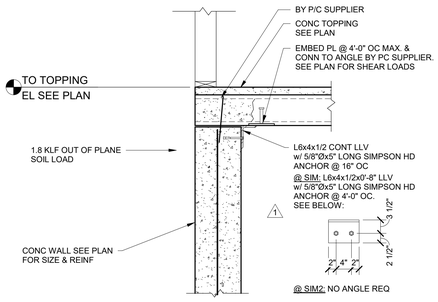

3 S700 SECTION - PLANK BEARING ONE SIDE @ CONC WALL
3/4" = 1'-0"

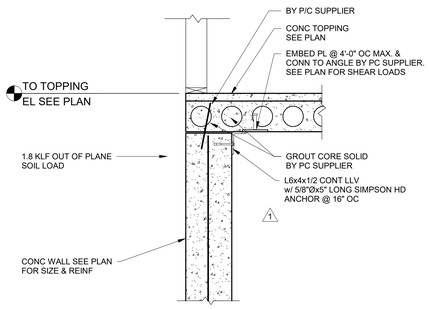

4 S700 SECTION - PLANK LAP ONE SIDE @ CONC WALL
3/4" = 1'-0"

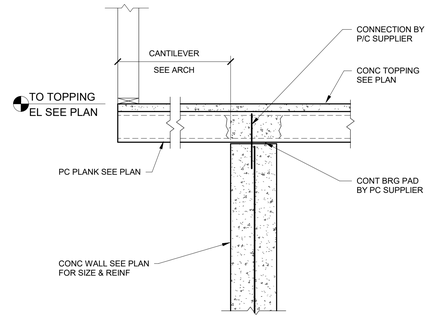

5 S700 SECTION - CANTILEVERED PLANK BRG AT CONC WALL
3/4" = 1'-0"

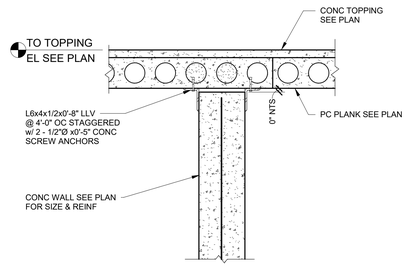

6 S700 SECTION - PLANK CONTINUOUS OVER NON-BEARING CONC WALL
3/4" = 1'-0"

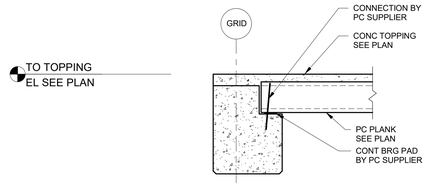

8 S700 SECTION - PLANK BEARING @ PRECAST LB BEAM
3/4" = 1'-0"

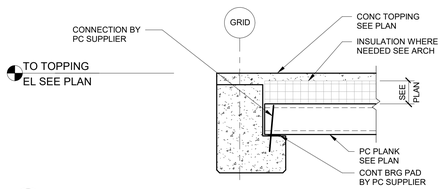

10 S700 SECTION - DROPPED PLANK BEARING @ PRECAST LB BEAM
3/4" = 1'-0"

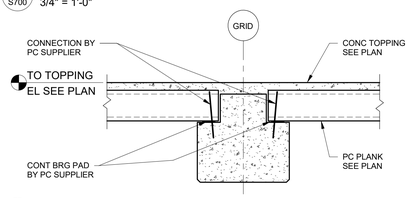

7 S700 SECTION - PLANK BEARING @ PRECAST IT BEAM
3/4" = 1'-0"

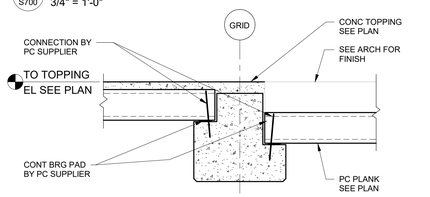

9 S700 SECTION - DROPPED PLANK BEARING @ PRECAST IT BEAM
3/4" = 1'-0"

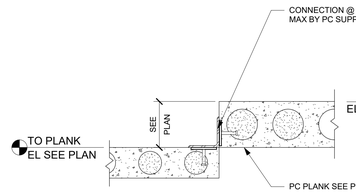

11 S700 SECTION - DROPPED PLANK CONNECTION
3/4" = 1'-0"

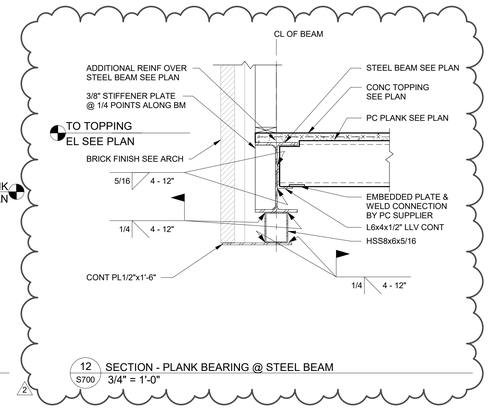

12 S700 SECTION - PLANK BEARING @ STEEL BEAM
3/4" = 1'-0"

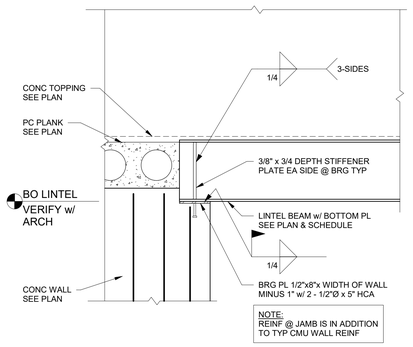

13 S700 DETAIL- TYP LINTEL BRG @ CONC WALL
3/4" = 1'-0"

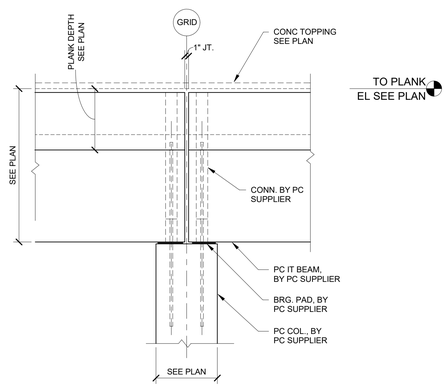

14 S700 SECTION - PC BEAM TO PC COLUMN
3/4" = 1'-0"

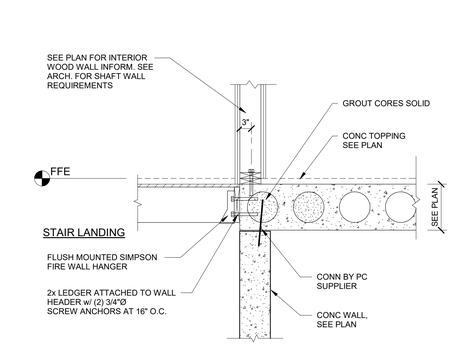

15 S700 SECTION - JOIST LEDGER AT PC PLANK
3/4" = 1'-0"

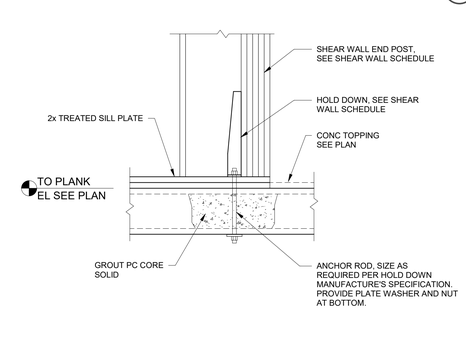

16 S700 SECTION - PC PLANK AT WOOD SHEAR WALL HOLD DOWN
3/4" = 1'-0"

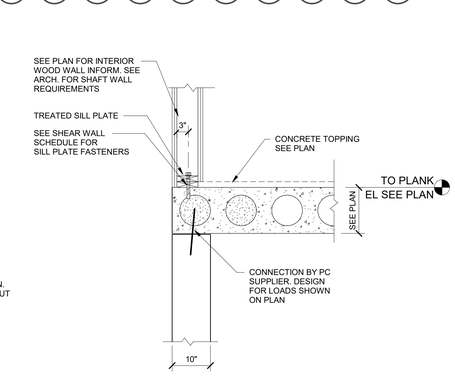

17 S700 SECTION - PC PLANK LAP TO ELEVATOR WALL
3/4" = 1'-0"

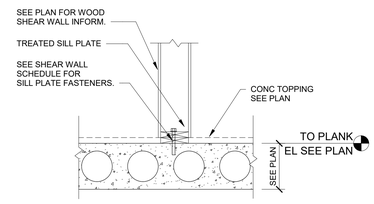

18 S700 SECTION - WOOD WALL TO PC PLANK
3/4" = 1'-0"

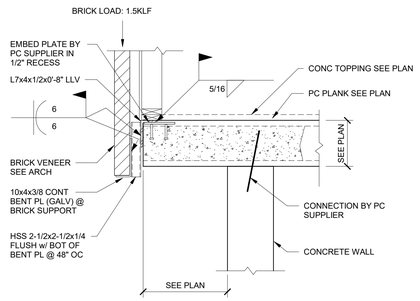

19 S700 SECTION - PC PLANK OVERHANG @ BRICK VENEER
3/4" = 1'-0"

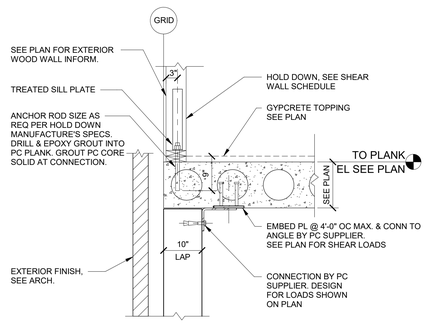

20 S700 SECTION - WOOD WALL HOLD DOWN TO PC PLANK AT EXTERIOR
3/4" = 1'-0"

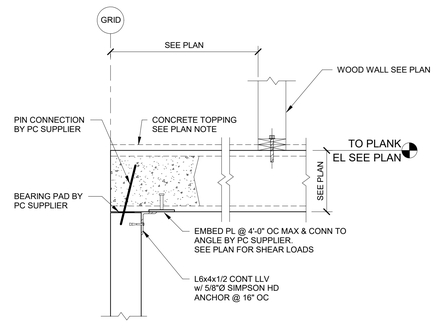

21 S700 SECTION - PC PLANK BRG. TO EXTERIOR WALL
3/4" = 1'-0"

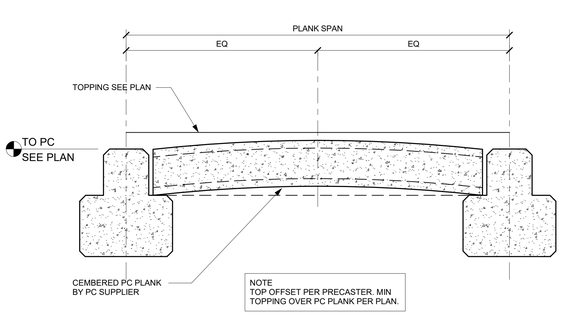

22 S700 DETAIL - MIN TOPPING OVER PRECAST PLANK
3/4" = 1'-0"

JLG architects
322 1st Ave N, Suite #600
Minneapolis, MN 55401
phone 612.746.4260
facsimile 612.746.4754
www.jlgarchitects.com
copyright © 2018

REIGSTAD
192 West 9th Street #200
Saint Paul, Minnesota 55102
Ph. 651.292.1125 Fax. 651.292.9062
14368 Creosote Road
Gulfport, Mississippi 39503
Ph. 228.868.0771 Fax. 228.868.0772

I hereby cetify that this plan, specification, or report was prepared by me or under my direct supervision and that I am a duly licened Engineer under the laws of the state of Minnesota.

Signed: Yendranata
Name: Yendranata
License No.: 40876

REVISION SCHEDULE

NO.	DESCRIPTION	DATE
1	ADDENDUM 01	06/30/2020
2	PROPOSAL REQUEST 02	09/21/2020

LWO DEVELOPMENT, LLC
EASTGATE APARTMENTS
OWATONNA, MN

DATE
06/19/2020
PHASE
CONSTRUCTION DOCUMENTS
PROJECT
20.033.00
SHEET
S700
PRECAST FRAMING SECTIONS & DETAILS

11/20/2020 12:11:15 PM

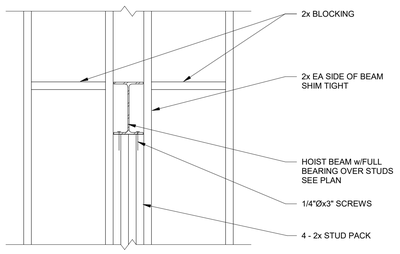

1 S711 DETAIL - WOOD FRAMING @ HOIST BEAM
1" = 1'-0"

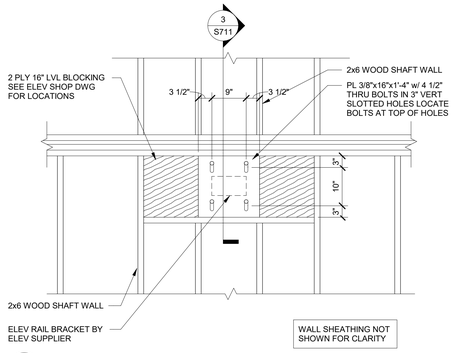

2 S711 DETAIL - RAIL SUPPORT @ ALL FLOORS
3/4" = 1'-0"

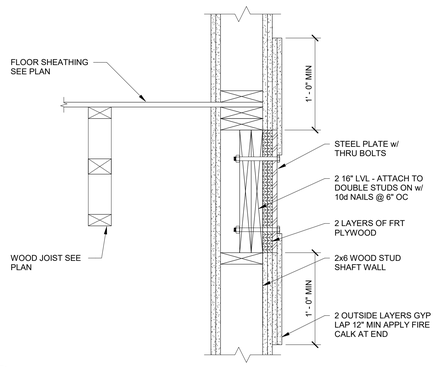

3 S711 SECTION - RAIL SUPPORT @ ALL FLOORS
1 1/2" = 1'-0"

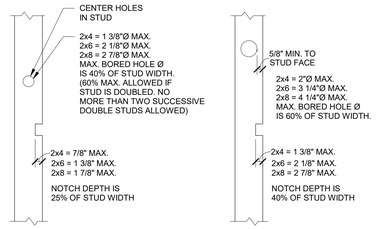

4 S711 SECTION - VERTICAL STUD NOTCHES/BORING GUIDE
3/4" = 1'-0"

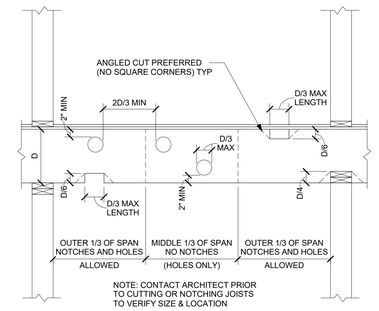

5 S711 SECTION - JOIST NOTCHES/BORING GUIDE
3/4" = 1'-0"

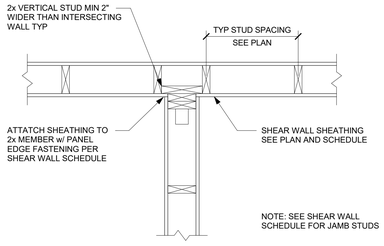

6 S711 DETAIL - SHEAR WALL SHEATHING CONNECTION @ INTERSECTING WALL
1" = 1'-0"

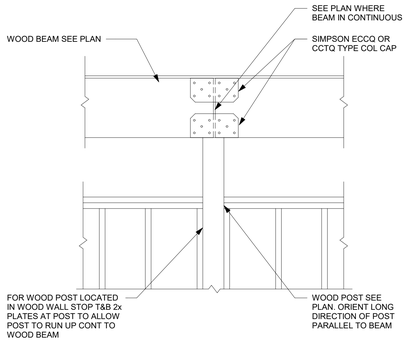

7 S711 SECTION - WOOD BEAM AT WOOD POST
3/4" = 1'-0"

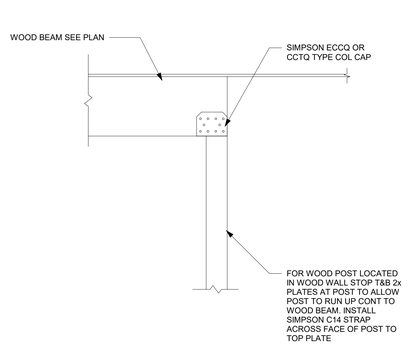

8 S711 SECTION - WOOD BEAM AT WOOD POST
3/4" = 1'-0"

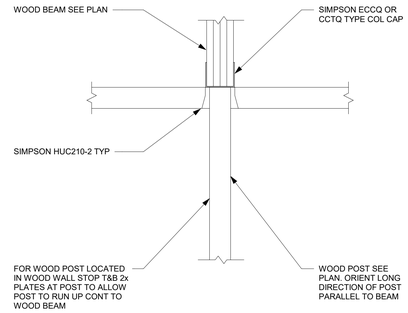

9 S711 SECTION - L6 WOOD BEAM AT WOOD POST
3/4" = 1'-0"

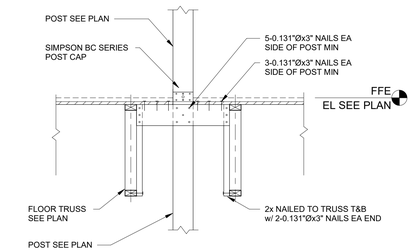

10 S711 SECTION - WOOD FLOOR TRUSS PARALLEL TO WOOD POST
3/4" = 1'-0"

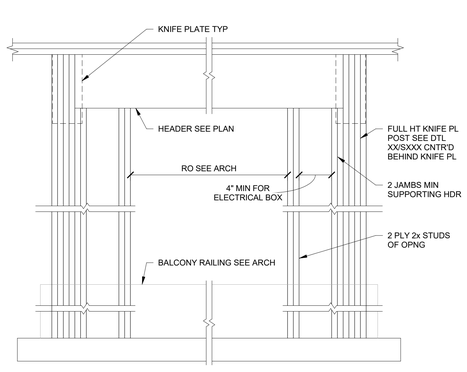

11 S711 DETAIL - ROUGH OPENING @ BALCONIES
3/4" = 1'-0"

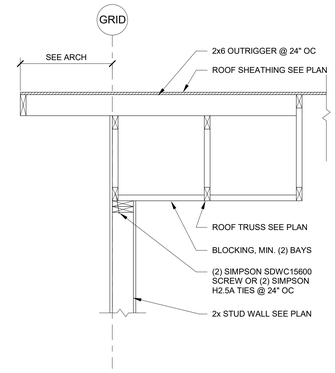

12 S711 SECTION - END ROOF TRUSS
3/4" = 1'-0"

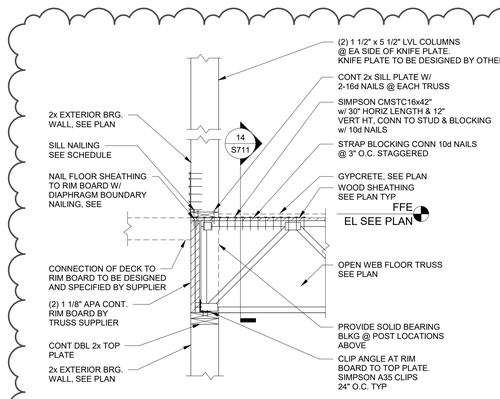

13 S711 SECTION - BALCONY CONNECTION
3/4" = 1'-0"

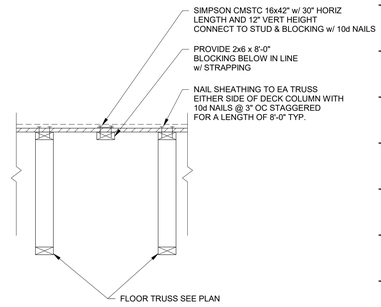

14 S711 DETAIL - BALCONY STRAPPING
1" = 1'-0"

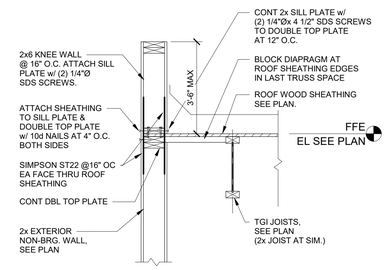

15 S711 SECTION - TGI JOIST PARALLEL AT EXTERIOR WALL
3/4" = 1'-0"

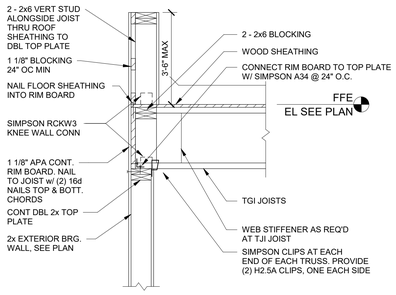

16 S711 SECTION - TGI JOIST BRG AT EXTERIOR WALL
3/4" = 1'-0"

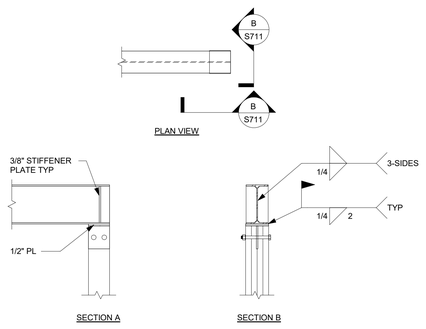

17 S711 DETAIL - TYP STL BRG @ WOOD POST
3/4" = 1'-0"

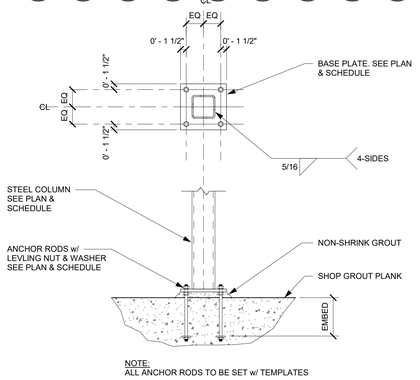

18 S711 SECTION - HSS COLUMN BASE PL & ANCHOR BOLT SETTING
3/4" = 1'-0"

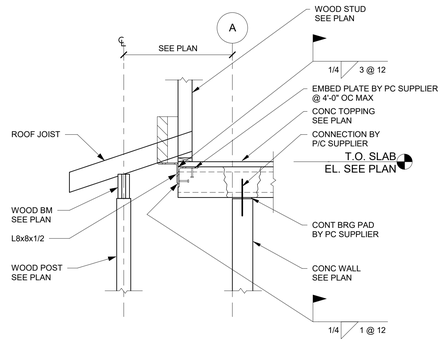

19 S711 SECTION - ENTRY ROOF CANOPY
1/2" = 1'-0"

JLG architects
322 1st Ave N, Suite #600
Minneapolis, MN 55401
phone 612.746.4260
facsimile 612.746.4754
www.jlgarchitects.com
copyright © 2018

REIGSTAD
192 West 9th Street #200
Saint Paul, Minnesota 55102
Ph. 651.292.1125 Fax. 651.292.9065
14368 Creosote Road
Gulfport, Mississippi 39503
Ph. 228.868.0771 Fax. 228.868.0772

I hereby cetify that this plan, specification, or report was prepared by me or under my direct supervision and that I am a duly licened Engineer under the laws of the state of Minnesota.

Signed: Yendranata
Name: Yendranata
License No.: 40876

REVISION SCHEDULE

NO.	DESCRIPTION	DATE
1	ADDENDUM 01	06/30/2020
2	PROPOSAL REQUEST 02	09/21/2020

LWO DEVELOPMENT, LLC
EASTGATE APARTMENTS
OWATONNA, MN

DATE 06/19/2020
PHASE CONSTRUCTION DOCUMENTS
PROJECT 20.033.00
SHEET **S711**
WOOD & STEEL FRAMING SECTIONS & DETAILS

11/20/2020 1:21:16 PM

SHEET MATERIAL ID LIST

MATERIAL ID	SPEC SECTION & DESCRIPTION
MET FAB-1	05 5000 - STEEL BOLLARD, WITH CONCRETE FILL

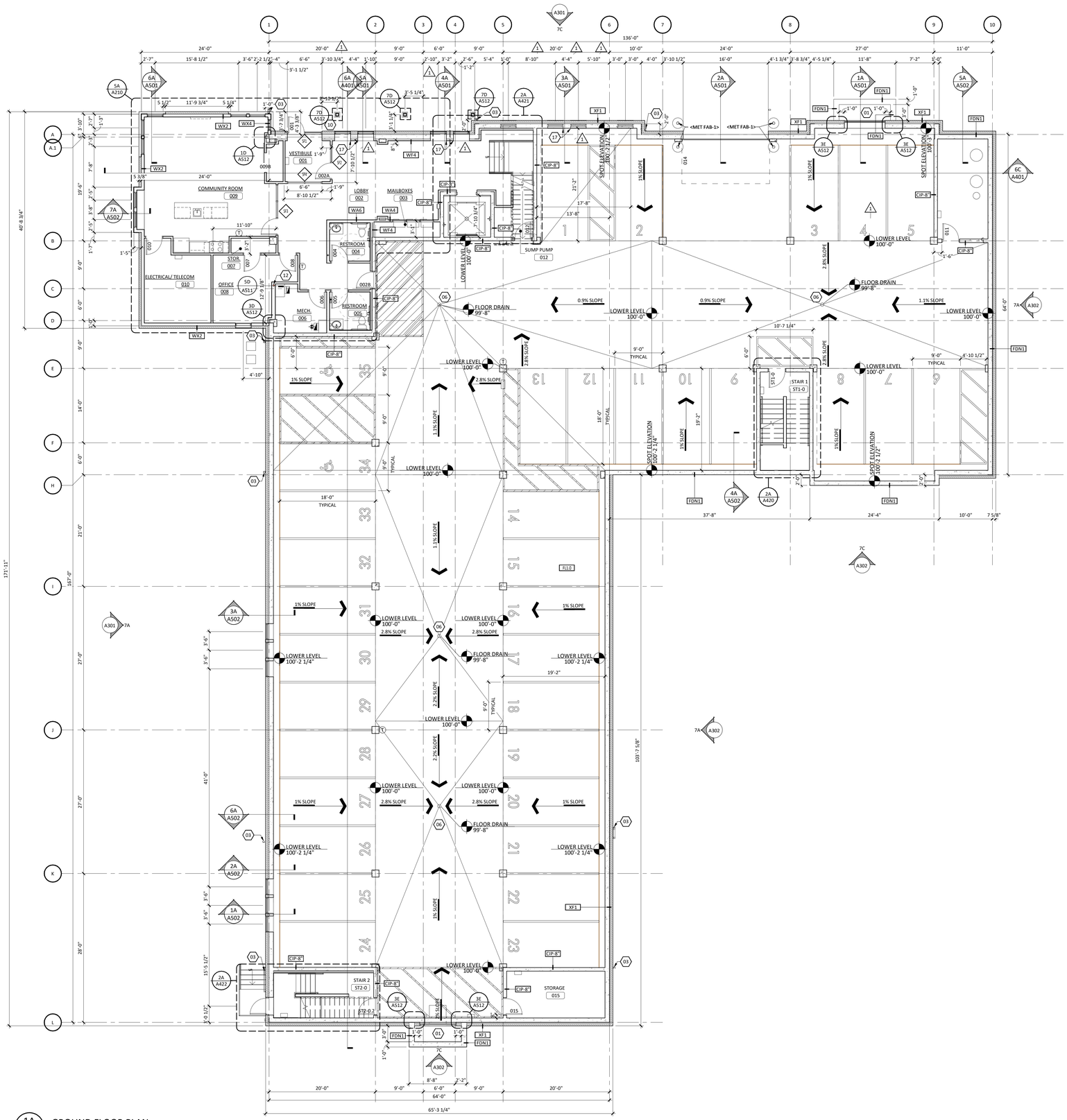

1A A200 GROUND FLOOR PLAN
SCALE: 1/8" = 1'-0"

FLOOR PLAN KEYNOTES

KEYNOTE	DESCRIPTION
01	LOUVER. VERIFY WIDTH WITH MECHANICAL.
02	WASHER TO BE INSTALLED TO THE LEFT OF THE DRYER.
03	DOWNSPOUT WITH PRECAST CONCRETE SPLASHBLOCK.
04	SCUPPER AND DOWNSPOUT
05	UNIT 2E TO USE <WASH DRY-1>, RUN <WIRE STOR-1> ADJACENT TO MACHINE ON PLUMBING WALL.
06	FLOOR DRAIN, SLOPE FLOORS TO DRAINS.
07	MOP BASIN AND <FRP-1> PANELS SURROUNDING BASIN FOR 48" UP TO 48" AFF.
08	PROVIDE LEVEL OF DISCHARGE STOP GATE
09	REFER TO 4E/A620 FOR TYPICAL SHELVING ELEVATIONS
10	KNOX BOX. MOUNT 6'-0" ABOVE FINISH FLOOR AT EXTERIOR.
11	ADA DOOR OPERATOR PUSH PAD TO BE MOUNTED 30" FROM FINISH FLOOR MEASURED TO THE BOTTOM OF THE PLATE AND NO MORE THAN 36" ABOVE FINISH FLOOR MEASURED TO THE TOP OF THE PLATE. LOCATE CENTERLINE OF PUSH PAD 24" BEYOND THE DOOR MINIMUM.
12	RADON VENT PIPE; SEE MECHANICAL
13	SCUPPER AND OVERFLOW SCUPPER
14	PROVIDE OPENING IN MASONRY FOR OPEN DRAINAGE. ONE COURSING IN HEIGHT, 1'-0" MINIMUM IN WIDTH.
15	PROVIDE FIRE TREATED FRAMING AT PARAPET WALL.
16	TRASH AND RECYCLING CHUTES TO HAVE 90 MINUTE RATED ACCESS DOORS.
17	MAINTAIN 12" BETWEEN WINDOW JAMBS (10" MINIMUM PER STRUCTURAL)

FLOOR PLAN GENERAL NOTES

A. FOR TYPICAL BARRIER FREE TOILET ROOM TYPES AND ACCESSORIES REQUIREMENTS AND LOCATIONS SEE DWG G120.
B. FOR TYPICAL HOUSEKEEPING CLOSETS ACCESSORIES REQUIREMENTS AND MOUNTING LOCATIONS SEE SHEET G120.
C. ALL PARTITION TYPES ARE "WA#" TYPICALLY UNLESS OTHERWISE NOTED.
D. COORDINATE PARTITION FIRE RATED REQUIREMENTS AS INDICATED ON REFLECTED CEILING PLANS - DRAWING SERIES A700.
E. TYPICALLY INSTALL SOAP DISPENSERS AND PAPER TOWEL DISPENSER AT ALL SINKS UNLESS NOTED OTHERWISE.
F. PROVIDE WALL REINFORCEMENT PER SHEET G120 AT WALL-MOUNTED SHELVES AND STORAGE UNITS, MARKER BOARDS, BULLETIN BOARDS, TACK BOARDS, TELEVISIONS AND OTHER CONTRACTOR OR OWNER FURNISHED WALL-MOUNTED ITEMS (REFER TO ACCESSORIES AND EQUIPMENT SCHEDULE) SEE SHEET G120.
G. FOR ALL CARPET TYPE CHANGES BETWEEN ROOMS, TRANSITION SHALL OCCUR AT CENTERLINE OF DOOR PANEL TYPICALLY - U.N.O. SEE SHEET A601.
H. COORDINATE DIMENSIONS W/ ASTERISK (IE - "X'-X") W/ EQUIPMENT VENDOR.
I. ALL DIMENSIONS ARE TO FACE OF GYPSUM BOARD OR MASONRY UNLESS OTHERWISE NOTED.
J. COORDINATE ALL FLOOR OPENING DIMENSIONS AND CLEARANCES FOR DUCTWORK W/ MECHANICAL CONTRACTOR - TYPICAL.
K. AT VANITY SINK BASE, EXTEND FINISH FLOOR, FINISH WALL & PROVIDE FINISHED INTERIOR CABINETS' SIDES.
L. AT SINK BASE CABINET, EXTEND FINISH FLOOR, FINISH WALL, PROVIDE FINISHED INTERIOR CABINET SIDES & INSTALL END PANEL AT DISHWASHER.
M. CONCEALED SPACES ARE TO HAVE GYP BD INSTALLED ON BOTH SIDES OF PARTITION OR FULLY FILLED WITH BLOWN-IN INSULATION.
N. ALL HALLWAYS IN UNITS ARE REQUIRED TO BE 42" IN WIDTH MINIMUM.

REVISION SCHEDULE

NO.	DESCRIPTION	DATE
1	ASI 01	11/09/20

JLG architects
322 1st Ave N, Suite #600
Minneapolis, MN 55401
phone 6 1 2.7 4 6.4 2 6 0
facsimile 6 1 2.7 4 6.4 7 5 4
www.jlgarchitects.com

copyright © 2020

I HEREBY CERTIFY THAT THIS PLAN WAS PREPARED BY ME OR UNDER MY DIRECT SUPERVISION AND THAT I AM A DULY REGISTERED ARCHITECT UNDER THE LAWS OF THE STATE OF MINNESOTA

NICOLE WASHBURN, AIA
46546
REG. NO
9/21/2020
DATE

LWO DEVELOPMENT, LLC
# EASTGATE APARTMENTS
OWATONNA, MN

DATE
06/19/2020
PHASE
CONSTRUCTION DOCUMENTS
PROJECT
18126
SHEET
A200
GROUND FLOOR PLAN

11/24/2020 12:01:20 PM

SHEET MATERIAL ID LIST

MATERIAL ID	SPEC SECTION & DESCRIPTION

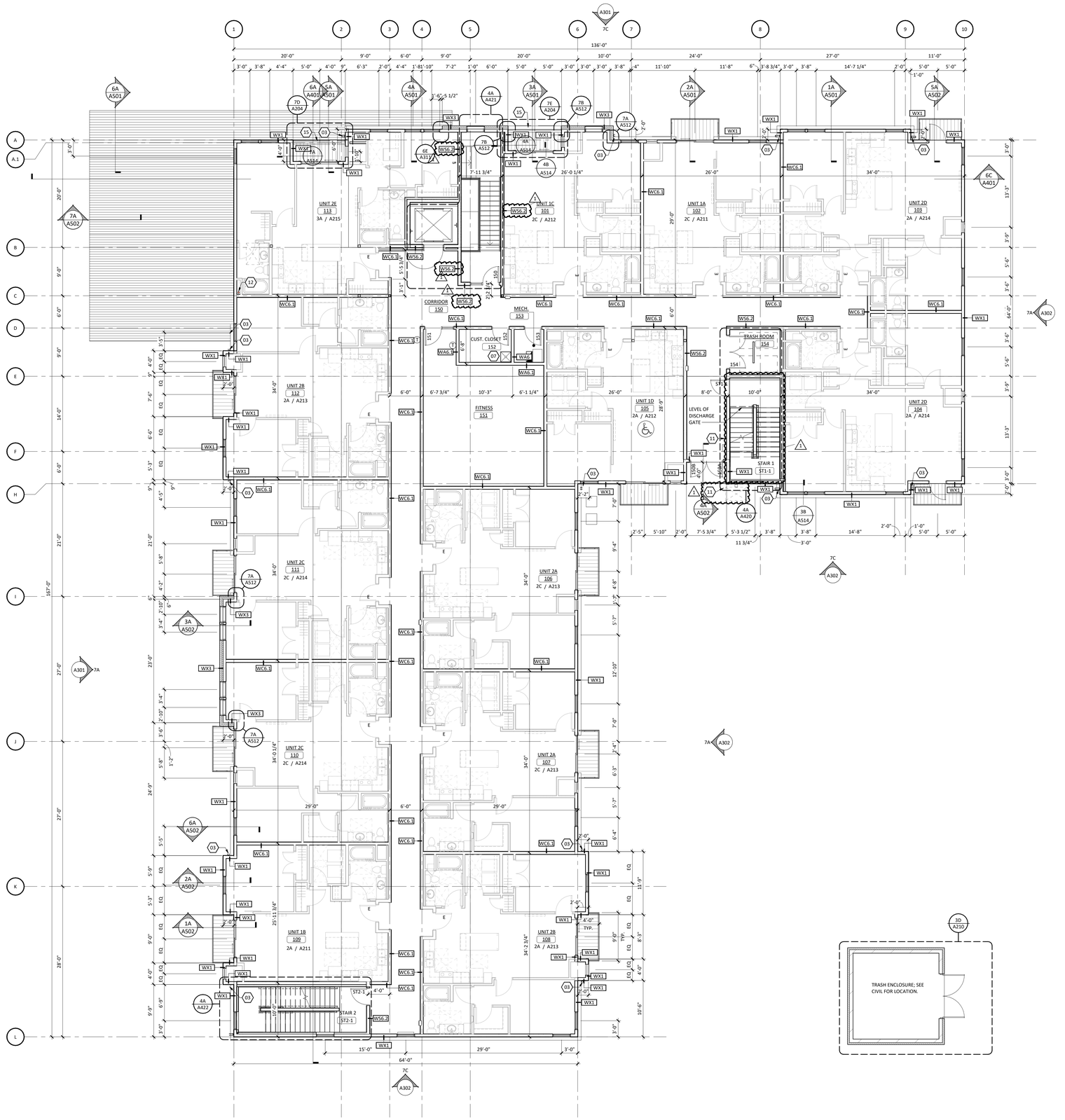

1A A201 FIRST FLOOR PLAN
SCALE: 1/8" = 1'-0"

FLOOR PLAN KEYNOTES

KEYNOTE	DESCRIPTION
01	LOUVER. VERIFY WIDTH WITH MECHANICAL.
02	WASHER TO BE INSTALLED TO THE LEFT OF THE DRYER.
03	DOWNSPOUT WITH PRECAST CONCRETE SPLASHBLOCK.
04	SCUPPER AND DOWNSPOUT
05	UNIT 2E TO USE <WASH DRY-1>, RUN <WIRE STOR-1> ADJACENT TO MACHINE ON PLUMBING WALL.
06	FLOOR DRAIN, SLOPE FLOORS TO DRAINS.
07	MOP BASIN AND <FRP-1> PANELS SURROUNDING BASIN FOR 48" UP TO 48" AFF.
08	PROVIDE LEVEL OF DISCHARGE STOP GATE
09	REFER TO 4E/A620 FOR TYPICAL SHELVING ELEVATIONS
10	KNOX BOX. MOUNT 6'-0" ABOVE FINISH FLOOR AT EXTERIOR.
11	ADA DOOR OPERATOR PUSH PAD TO BE MOUNTED 30" FROM FINISH FLOOR MEASURED TO THE BOTTOM OF THE PLATE AND NO MORE THAN 36" ABOVE FINISH FLOOR MEASURED TO THE TOP OF THE PLATE. LOCATE CENTERLINE OF PUSH PAD 24" BEYOND THE DOOR MINIMUM.
12	RADON VENT PIPE. SEE MECHANICAL
13	SCUPPER AND OVERFLOW SCUPPER
14	PROVIDE OPENING IN MASONRY FOR OPEN DRAINAGE. ONE COURSING IN HEIGHT, 1'-0" MINIMUM IN WIDTH.
15	PROVIDE FIRE TREATED FRAMING AT PARAPET WALL.
16	TRASH AND RECYCLING CHUTES TO HAVE 90 MINUTE RATED ACCESS DOORS.
17	MAINTAIN 12" BETWEEN WINDOW JAMBS (10" MINIMUM PER STRUCTURAL)

FLOOR PLAN GENERAL NOTES

A. FOR TYPICAL BARRIER FREE TOILET ROOM TYPES AND ACCESSORIES REQUIREMENTS AND LOCATIONS SEE DWG G120.
B. FOR TYPICAL HOUSEKEEPING CLOSETS ACCESSORIES REQUIREMENTS AND MOUNTING LOCATIONS SEE SHEET G120.
C. ALL PARTITION TYPES ARE "WA#" TYPICALLY UNLESS OTHERWISE NOTED.
D. COORDINATE PARTITION FIRE RATED REQUIREMENTS AS INDICATED ON REFLECTED CEILING PLANS - DRAWING SERIES A700.
E. TYPICALLY INSTALL SOAP DISPENSERS AND PAPER TOWEL DISPENSER AT ALL SINKS UNLESS NOTED OTHERWISE.
F. PROVIDE WALL REINFORCEMENT PER SHEET G120 AT WALL-MOUNTED SHELVES AND STORAGE UNITS, MARKER BOARDS, BULLETIN BOARDS, TACK BOARDS, TELEVISIONS AND OTHER CONTRACTOR OR OWNER FURNISHED WALL-MOUNTED ITEMS (REFER TO ACCESSORIES AND EQUIPMENT SCHEDULE) SEE SHEET G120.
G. FOR ALL CARPET TYPE CHANGES BETWEEN ROOMS, TRANSITION SHALL OCCUR AT CENTERLINE OF DOOR PANEL TYPICALLY - U.N.O. SEE SHEET A601.
H. COORDINATE DIMENSIONS W/ ASTERISK (IE - "X'-X") W/ EQUIPMENT VENDOR.
I. ALL DIMENSIONS ARE TO FACE OF GYPSUM BOARD OR MASONRY UNLESS OTHERWISE NOTED.
J. COORDINATE ALL FLOOR OPENING DIMENSIONS AND CLEARANCES FOR DUCTWORK W/ MECHANICAL CONTRACTOR - TYPICAL.
K. AT VANITY SINK BASE, EXTEND FINISH FLOOR, FINISH WALL & PROVIDE FINISHED INTERIOR CABINETS' SIDES.
L. AT SINK BASE CABINET, EXTEND FINISH FLOOR, FINISH WALL, PROVIDE FINISHED INTERIOR CABINET SIDES & INSTALL END PANEL AT DISHWASHER.
M. CONCEALED SPACES ARE TO HAVE GYP BD INSTALLED ON BOTH SIDES OF PARTITION OR FULLY FILLED WITH BLOWN-IN INSULATION.
N. ALL HALLWAYS IN UNITS ARE REQUIRED TO BE 42" IN WIDTH MINIMUM.

JLG architects
322 1st Ave N, Suite #600
Minneapolis, MN 55401
phone 6 1 2.7 4 6.4 2 6 0
facsimile 6 1 2.7 4 6.4 7 5 4
www.jlgarchitects.com

copyright © 2020

REVISION SCHEDULE

NO.	DESCRIPTION	DATE
1	PR 02	9/21/20

I HEREBY CERTIFY THAT THIS PLAN WAS PREPARED BY ME OR UNDER MY DIRECT SUPERVISION AND THAT I AM A DULY REGISTERED ARCHITECT UNDER THE LAWS OF THE STATE OF MINNESOTA

NICOLE WASHBURN, AIA — 46546 REG. NO — 9/21/2020 DATE

LWO DEVELOPMENT, LLC
# EASTGATE APARTMENTS
OWATONNA, MN

DATE 06/19/2020
PHASE CONSTRUCTION DOCUMENTS
PROJECT 18126
SHEET A201
FIRST FLOOR PLAN

11/24/2020 12:01:27 PM

SHEET MATERIAL ID LIST

MATERIAL ID	SPEC SECTION & DESCRIPTION

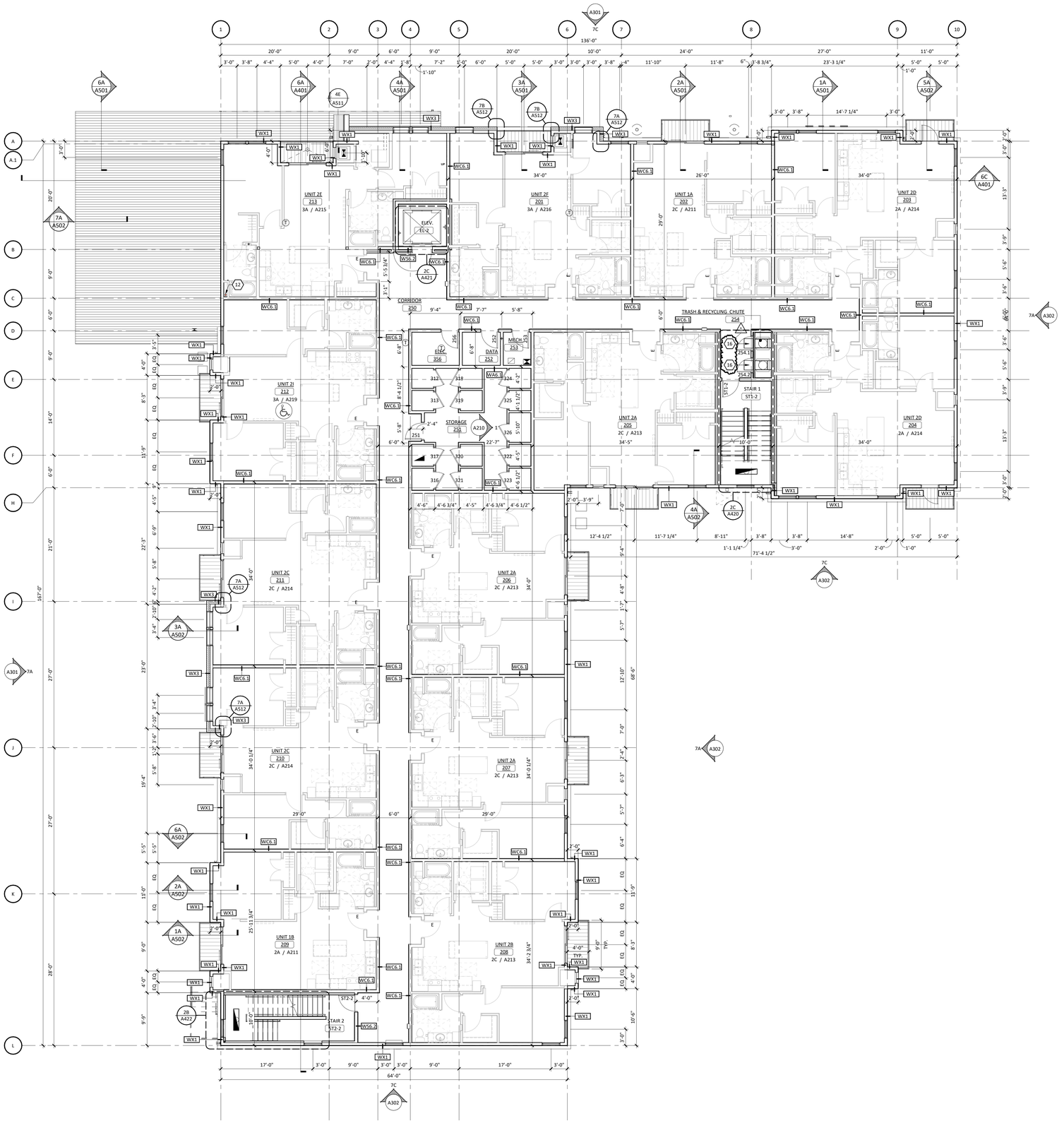

1A A202 SECOND FLOOR PLAN
SCALE: 1/8" = 1'-0"

FLOOR PLAN KEYNOTES

KEYNOTE	DESCRIPTION
01	LOUVER. VERIFY WIDTH WITH MECHANICAL.
02	WASHER TO BE INSTALLED TO THE LEFT OF THE DRYER.
03	DOWNSPOUT WITH PRECAST CONCRETE SPLASHBLOCK.
04	SCUPPER AND DOWNSPOUT
05	UNIT 2E TO USE <WASH DRY-1>, RUN <WIRE STOR-1> ADJACENT TO MACHINE ON PLUMBING WALL.
06	FLOOR DRAIN, SLOPE FLOORS TO DRAINS.
07	MOP BASIN AND <FRP-1> PANELS SURROUNDING BASIN FOR 48" UP TO 48" AFF.
08	PROVIDE LEVEL OF DISCHARGE STOP GATE
09	REFER TO 4E/A620 FOR TYPICAL SHELVING ELEVATIONS
10	KNOX BOX. MOUNT 6'-0" ABOVE FINISH FLOOR AT EXTERIOR.
11	ADA DOOR OPERATOR PUSH PAD TO BE MOUNTED 30" FROM FINISH FLOOR MEASURED TO THE BOTTOM OF THE PLATE AND NO MORE THAN 36" ABOVE FINISH FLOOR MEASURED TO THE TOP OF THE PLATE. LOCATE CENTERLINE OF PUSH PAD 24" BEYOND THE DOOR MINIMUM.
12	RADON VENT PIPE; SEE MECHANICAL
13	SCUPPER AND OVERFLOW SCUPPER
14	PROVIDE OPENING IN MASONRY FOR OPEN DRAINAGE. ONE COURSING IN HEIGHT, 1'-0" MINIMUM IN WIDTH.
15	PROVIDE FIRE TREATED FRAMING AT PARAPET WALL.
16	TRASH AND RECYCLING CHUTES TO HAVE 90 MINUTE RATED ACCESS DOORS.
17	MAINTAIN 12" BETWEEN WINDOW JAMBS (10" MINIMUM PER STRUCTURAL)

FLOOR PLAN GENERAL NOTES

A. FOR TYPICAL BARRIER FREE TOILET ROOM TYPES AND ACCESSORIES REQUIREMENTS AND LOCATIONS SEE DWG G120.
B. FOR TYPICAL HOUSEKEEPING CLOSETS ACCESSORIES REQUIREMENTS AND MOUNTING LOCATIONS SEE SHEET G120.
C. ALL PARTITION TYPES ARE "WA#" TYPICALLY UNLESS OTHERWISE NOTED.
D. COORDINATE PARTITION FIRE RATED REQUIREMENTS AS INDICATED ON REFLECTED CEILING PLANS - DRAWING SERIES A700.
E. TYPICALLY INSTALL SOAP DISPENSERS AND PAPER TOWEL DISPENSER AT ALL SINKS UNLESS NOTED OTHERWISE.
F. PROVIDE WALL REINFORCEMENT PER SHEET G120 AT WALL-MOUNTED SHELVES AND STORAGE UNITS, MARKER BOARDS, BULLETIN BOARDS, TACK BOARDS, TELEVISIONS AND OTHER CONTRACTOR OR OWNER FURNISHED WALL-MOUNTED ITEMS (REFER TO ACCESSORIES AND EQUIPMENT SCHEDULE) SEE SHEET G120.
G. FOR ALL CARPET TYPE CHANGES BETWEEN ROOMS, TRANSITION SHALL OCCUR AT CENTERLINE OF DOOR PANEL TYPICALLY - U.N.O. SEE SHEET A601.
H. COORDINATE DIMENSIONS W/ ASTERISK (IE - "X'-X") W/ EQUIPMENT VENDOR.
I. ALL DIMENSIONS ARE TO FACE OF GYPSUM BOARD OR MASONRY UNLESS OTHERWISE NOTED.
J. COORDINATE ALL FLOOR OPENING DIMENSIONS AND CLEARANCES FOR DUCTWORK W/ MECHANICAL CONTRACTOR - TYPICAL.
K. AT VANITY SINK BASE, EXTEND FINISH FLOOR, FINISH WALL & PROVIDE FINISHED INTERIOR CABINETS' SIDES.
L. AT SINK BASE CABINET, EXTEND FINISH FLOOR, FINISH WALL, PROVIDE FINISHED INTERIOR CABINET SIDES & INSTALL END PANEL AT DISHWASHER.
M. CONCEALED SPACES ARE TO HAVE GYP BD INSTALLED ON BOTH SIDES OF PARTITION OR FULLY FILLED WITH BLOWN-IN INSULATION.
N. ALL HALLWAYS IN UNITS ARE REQUIRED TO BE 42" IN WIDTH MINIMUM.

REVISION SCHEDULE

NO.	DESCRIPTION	DATE
1	PR 02	9/21/20

JLG architects
322 1st Ave N, Suite #600
Minneapolis, MN 55401
phone 6 1 2.7 4 6.4 2 6 0
facsimile 6 1 2.7 4 6.4 7 5 4
www.jlgarchitects.com

copyright © 2020

I HEREBY CERTIFY THAT THIS PLAN WAS PREPARED BY ME OR UNDER MY DIRECT SUPERVISION AND THAT I AM A DULY REGISTERED ARCHITECT UNDER THE LAWS OF THE STATE OF MINNESOTA

NICOLE WASHBURN, AIA
46546
REG. NO
9/21/2020
DATE

LWO DEVELOPMENT, LLC
EASTGATE APARTMENTS
OWATONNA, MN

DATE
06/19/2020
PHASE
CONSTRUCTION DOCUMENTS
PROJECT
18126
SHEET
A202
SECOND FLOOR PLAN

11/24/2020 12:01:42 PM

SHEET MATERIAL ID LIST

MATERIAL ID	SPEC SECTION & DESCRIPTION



FLOOR PLAN KEYNOTES

KEYNOTE	DESCRIPTION
01	LOUVER. VERIFY WIDTH WITH MECHANICAL.
02	WASHER TO BE INSTALLED TO THE LEFT OF THE DRYER.
03	DOWNSPOUT WITH PRECAST CONCRETE SPLASHBLOCK.
04	SCUPPER AND DOWNSPOUT
05	UNIT 2E TO USE <WASH DRY-1>, RUN <WIRE STOR-1> ADJACENT TO MACHINE ON PLUMBING WALL.
06	FLOOR DRAIN, SLOPE FLOORS TO DRAINS.
07	MOP BASIN AND <FRP-1> PANELS SURROUNDING BASIN FOR 48" UP TO 48" AFF.
08	PROVIDE LEVEL OF DISCHARGE STOP GATE
09	REFER TO 4E/A620 FOR TYPICAL SHELVING ELEVATIONS
10	KNOX BOX. MOUNT 6'-0" ABOVE FINISH FLOOR AT EXTERIOR.
11	ADA DOOR OPERATOR PUSH PAD TO BE MOUNTED 30" FROM FINISH FLOOR MEASURED TO THE BOTTOM OF THE PLATE AND NO MORE THAN 36" ABOVE FINISH FLOOR MEASURED TO THE TOP OF THE PLATE. LOCATE CENTERLINE OF PUSH PAD 24" BEYOND THE DOOR MINIMUM.
12	RADON VENT PIPE; SEE MECHANICAL
13	SCUPPER AND OVERFLOW SCUPPER
14	PROVIDE OPENING IN MASONRY FOR OPEN DRAINAGE. ONE COURSING IN HEIGHT, 1'-0" MINIMUM IN WIDTH.
15	PROVIDE FIRE TREATED FRAMING AT PARAPET WALL.
16	TRASH AND RECYCLING CHUTES TO HAVE 90 MINUTE RATED ACCESS DOORS.
17	MAINTAIN 12" BETWEEN WINDOW JAMBS (10" MINIMUM PER STRUCTURAL)

FLOOR PLAN GENERAL NOTES

A. FOR TYPICAL BARRIER FREE TOILET ROOM TYPES AND ACCESSORIES REQUIREMENTS AND LOCATIONS SEE DWG G120.
B. FOR TYPICAL HOUSEKEEPING CLOSETS ACCESSORIES REQUIREMENTS AND MOUNTING LOCATIONS SEE SHEET G120.
C. ALL PARTITION TYPES ARE "WA4" TYPICALLY UNLESS OTHERWISE NOTED.
D. COORDINATE PARTITION FIRE RATED REQUIREMENTS AS INDICATED ON REFLECTED CEILING PLANS - DRAWING SERIES A700.
E. TYPICALLY INSTALL SOAP DISPENSERS AND PAPER TOWEL DISPENSER AT ALL SINKS UNLESS NOTED OTHERWISE.
F. PROVIDE WALL REINFORCEMENT PER SHEET G120 AT WALL-MOUNTED SHELVES AND STORAGE UNITS, MARKER BOARDS, BULLETIN BOARDS, TACK BOARDS, TELEVISIONS AND OTHER CONTRACTOR OR OWNER FURNISHED WALL-MOUNTED ITEMS (REFER TO ACCESSORIES AND EQUIPMENT SCHEDULE) SEE SHEET G120.
G. FOR ALL CARPET TYPE CHANGES BETWEEN ROOMS, TRANSITION SHALL OCCUR AT CENTERLINE OF DOOR PANEL TYPICALLY - U.N.O. SEE SHEET A601.
H. COORDINATE DIMENSIONS W/ ASTERISK (IE - "X'-X") W/ EQUIPMENT VENDOR.
I. ALL DIMENSIONS ARE TO FACE OF GYPSUM BOARD OR MASONRY UNLESS OTHERWISE NOTED.
J. COORDINATE ALL FLOOR OPENING DIMENSIONS AND CLEARANCES FOR DUCTWORK W/ MECHANICAL CONTRACTOR - TYPICAL.
K. AT VANITY SINK BASE, EXTEND FINISH FLOOR, FINISH WALL & PROVIDE FINISHED INTERIOR CABINETS' SIDES.
L. AT SINK BASE CABINET, EXTEND FINISH FLOOR, FINISH WALL, PROVIDE FINISHED INTERIOR CABINET SIDES & INSTALL END PANEL AT DISHWASHER.
M. CONCEALED SPACES ARE TO HAVE GYP BD INSTALLED ON BOTH SIDES OF PARTITION OR FULLY FILLED WITH BLOWN-IN INSULATION.
N. ALL HALLWAYS IN UNITS ARE REQUIRED TO BE 42" IN WIDTH MINIMUM.

1A / A203 THIRD FLOOR PLAN
SCALE: 1/8" = 1'-0"

11/24/2020 12:01:52 PM

JLG architects
322 1st Ave N, Suite #600
Minneapolis, MN 55401
phone 6 1 2 7 4 6 4 2 6 0
facsimile 6 1 2 7 4 6 4 7 5 4
www.jlgarchitects.com

copyright © 2020

REVISION SCHEDULE

NO.	DESCRIPTION	DATE
1	PR 02	9/21/20

I HEREBY CERTIFY THAT THIS PLAN WAS PREPARED BY ME OR UNDER MY DIRECT SUPERVISION AND THAT I AM A DULY REGISTERED ARCHITECT UNDER THE LAWS OF THE STATE OF MINNESOTA

NICOLE WASHBURN, AIA
46546
REG. NO
9/21/2020
DATE

LWO DEVELOPMENT, LLC
# EASTGATE APARTMENTS
OWATONNA, MN

DATE
06/19/2020
PHASE
CONSTRUCTION DOCUMENTS
PROJECT
18126
SHEET
A203
THIRD FLOOR PLAN

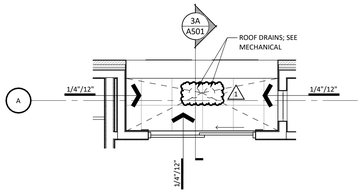

7E A204 ENLARGED ROOM PLAN - UNIT 101
SCALE: 1/4" = 1'-0"

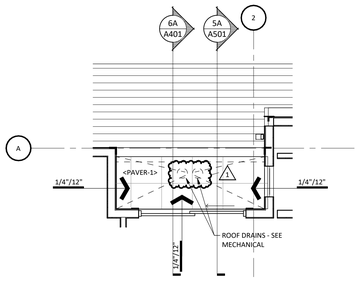

7D A204 ENLARGED ROOM PLAN - UNIT 113
SCALE: 1/4" = 1'-0"

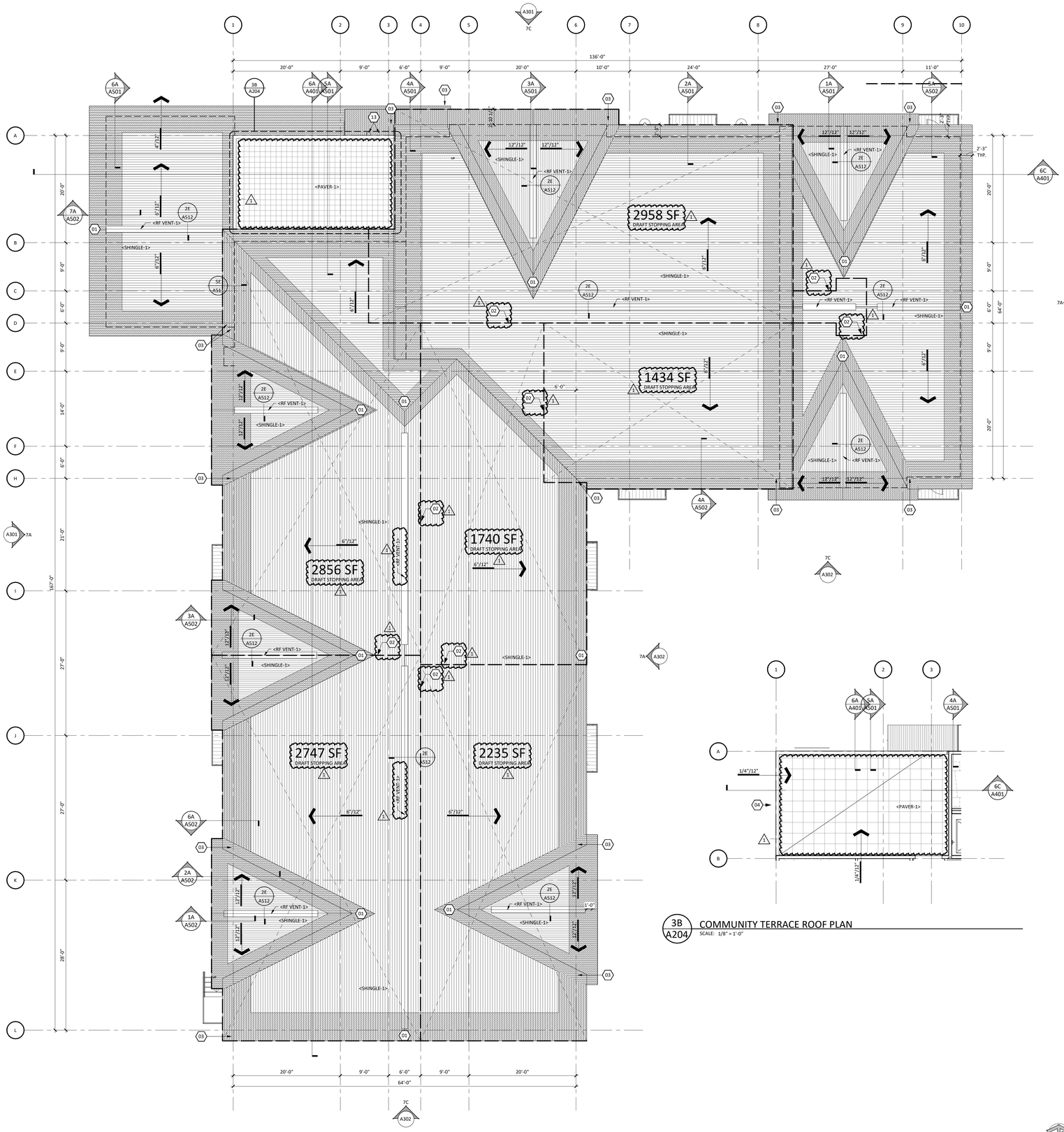

3B A204 COMMUNITY TERRACE ROOF PLAN
SCALE: 1/8" = 1'-0"

1 A204 ROOF PLAN
SCALE: 1/8" = 1'-0"

SHEET MATERIAL ID LIST

MATERIAL ID	SPEC SECTION & DESCRIPTION
PAVER-1	07 5300 - CONCRETE ROOF PAVER
RF VENT-1	07 3113 - SHINGLE-OVER RIDGE VENT
SHINGLE-1	07 3113 - LAMINATED FIBERGLASS SHINGLES

ROOF PLAN KEYNOTES

KEYNOTE	DESCRIPTION
01	<RF UNLMNT-5> EAVE PROTECTION MEMBRANE, EXTEND BEYOND EXTERIOR WALL PER MFR RECOMMENDATIONS.
02	PROVIDE DRAFTSTOPPING AT DEMISING OR CORRIDOR WALLS. DRAFT STOPPING TO EXTEND TO HEIGHEST ROOF DECK. DRAFT STOPPING AREA NOT TO EXCEED 3,000 SQUARE FEET OR TWO UNITS.
04	CONTINUOUS GUTTER

FLOOR PLAN KEYNOTES

KEYNOTE	DESCRIPTION
01	LOUVER. VERIFY WIDTH WITH MECHANICAL.
02	WASHER TO BE INSTALLED TO THE LEFT OF THE DRYER.
03	DOWNSPOUT WITH PRECAST CONCRETE SPLASHBLOCK.
04	SCUPPER AND DOWNSPOUT
05	UNIT 2E TO USE <WASH DRY-1>, RUN <WIRE STOR-1> ADJACENT TO MACHINE ON PLUMBING WALL.
06	FLOOR DRAIN, SLOPE FLOORS TO DRAINS.
07	MOP BASIN AND <FRP-1> PANELS SURRDUNDING BASIN FOR 48" UP TO 48" AFF.
08	PROVIDE LEVEL OF DISCHARGE STOP GATE
09	REFER TO 4E/A620 FOR TYPICAL SHELVING ELEVATIONS
10	KNOX BOX, MOUNT 6'-0" ABOVE FINISH FLOOR AT EXTERIOR.
11	ADA DOOR OPERATOR PUSH PAD TO BE MOUNTED 30" FROM FINISH FLOOR MEASURED TO THE BOTTOM OF THE PLATE AND NO MORE THAN 36" ABOVE FINISH FLOOR MEASURED TO THE TOP OF THE PLATE. LOCATE CENTERLINE OF PUSH PAD 24" BEYOND THE DOOR MINIMUM.
12	RADON VENT PIPE; SEE MECHANICAL
13	SCUPPER AND OVERFLOW SCUPPER
14	PROVIDE OPENING IN MASONRY FOR OPEN DRAINAGE. ONE COURSING IN HEIGHT, 1'-0" MINIMUM IN WIDTH.
15	PROVIDE FIRE TREATED FRAMING AT PARAPET WALL.
16	TRASH AND RECYCLING CHUTES TO HAVE 90 MINUTE RATED ACCESS DOORS.
17	MAINTAIN 12" BETWEEN WINDOW JAMBS (10" MINIMUM PER STRUCTURAL)

ROOF PLAN GENERAL NOTES

A. COORDINATE FINAL SIZE AND FINAL LOCATION OF ALL EQUIPMENT SUPPORT WITH THE APPROPRIATE EQUIPMENT MANUFACTURER.
B. PROVIDE POSITIVE SLOPE TO ALL ROOF DRAINS. ROOF SLOPE TO BE 1/4" PER FOOT MINIMUM.
C. SEE DRAWING AS1D SERIES FOR ROOF DETAILS. ROOFING CONTRACTOR TO VERIFY ALL ROOF DETAILS COMPLY WITH APPROVED ROOFING SYSTEM. IT IS THE RESPONSIBILITY OF THE ROOFING CONTRACTOR TO SUPPLY ANY ADDITIONAL DETAILS AND/OR MATERIALS TO ENSURE COMPLIANCE WITH WARRANTY.
D. REFER TO MECHANICAL AND ELECTRICAL DOCUMENTS FOR ALL PIPES, CURBS, VENTS, DUCTS, CONDUITS, AND OTHER FEATURES EXTENDING THROUGH ROOF SURFACES WHICH REQUIRE FLASHING AND COORDINATE SIZE AND LOCATION OF SAME.
E. FOR ROOF ASSEMBLY TYPES SEE SHEET #G102.
F. INLET OF OVERFLOW ROOF SUMPS SHALL BE LOCATED 2" ABOVE ROOF SUMP INLET (TYP) U.N.O.
G. SEE MECHANICAL DRAWINGS FOR FINAL QUANTITIES & FINAL LOCATIONS OF VENTS THRU ROOF.
H. PROVIDE SPLASH BLOCK AT ALL PRIMARY AND SECONDARY RAIN CONDUCTOR TERMINATIONS ONTO SINGLE-PLY MEMBRANE ROOFING
I. INSTALL ROOF FRAMES PRIOR TO CUTTING & REMOVING OF ANY METAL DECK.

R.S. - ROOF SUMP
H.P. - HIGH POINT
O.S. - OVERFLOW ROOF SUMP
S.C. - SCUPPER
V.T.R. - VENT THRU ROOF

REVISION SCHEDULE

NO.	DESCRIPTION	DATE
1	PR 02	9/21/20

JLG architects
322 1st Ave N, Suite #600
Minneapolis, MN 55401
phone 6 1 2 7 4 6 4 2 6 0
facsimile 6 1 2 7 4 6 4 7 5 4
www.jlgarchitects.com
copyright © 2020

I HEREBY CERTIFY THAT THIS PLAN WAS PREPARED BY ME OR UNDER MY DIRECT SUPERVISION AND THAT I AM A DULY REGISTERED ARCHITECT UNDER THE LAWS OF THE STATE OF MINNESOTA

NICOLE WASHBURN, AIA — 46546 — REG. NO — 9/21/2020 — DATE

LWO DEVELOPMENT, LLC
# EASTGATE APARTMENTS
OWATONNA, MN

DATE 06/19/2020
PHASE CONSTRUCTION DOCUMENTS
PROJECT 18126
SHEET A204
ROOF PLAN

11/24/2020 12:02:00 PM

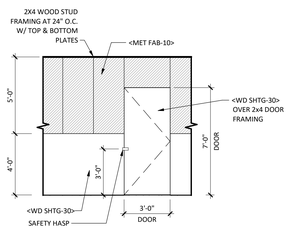

NOTES:

1. INSTALL WOOD SHEATHING & WIRE MESH AT HALLWAY SIDE OF FRAMING.
2. INSTALL WOOD SHEATHING & WIRE MESH AT ONE SIDE OF STORAGE UNIT PARTITION FRAMING.
3. INSTALL TOP & BOTTOM PLATES OVER CEILING BYP BRD & FLOOR FINISH.
4. DOOR HARDWARE: PROVIDE (1) SAFETY HASP (STANNEY, 915 SAFETY HASP, GALVANIZED, 4 1/2") & (2) HINGES (STANLEY, 741 ROUND CORNER, SATIN BRASS, 3"x3".)

1 A210 TYPICAL STORAGE UNIT ELEVATION
SCALE: 1/4" = 1'-0"

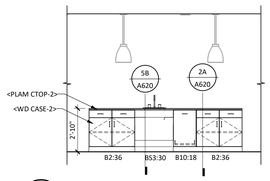

8D A210 COMMUNITY ROOM KITCHEN 2
SCALE: 1/4" = 1'-0"

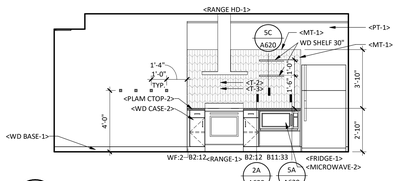

7D A210 COMMUNITY ROOM KITCHEN 1
SCALE: 1/4" = 1'-0"

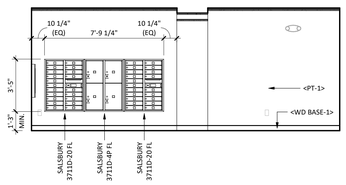

7C A210 MAILBOX ELEVATION
SCALE: 1/4" = 1'-0"

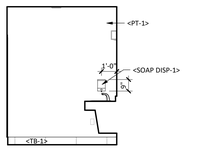

8B A210 RESTROOM 004 - EAST ELEVATION
SCALE: 1/4" = 1'-0"

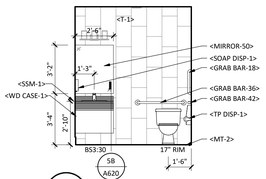

7B A210 RESTROOM 004 - NORTH ELEVATION
SCALE: 1/4" = 1'-0"

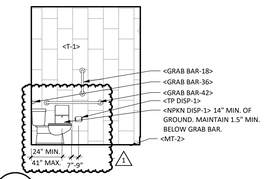

6B A210 RESTROOM 004 - WEST ELEVATION
SCALE: 1/4" = 1'-0"

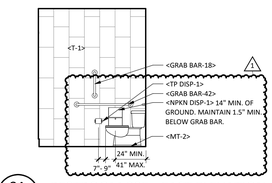

8A A210 RESTROOM 005 - EAST ELEVATION
SCALE: 1/4" = 1'-0"

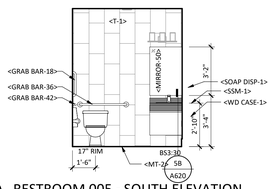

7A A210 RESTROOM 005 - SOUTH ELEVATION
SCALE: 1/4" = 1'-0"

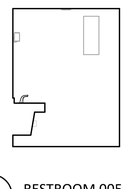

6A A210 RESTROOM 005 - WEST ELEVATION
SCALE: 1/4" = 1'-0"

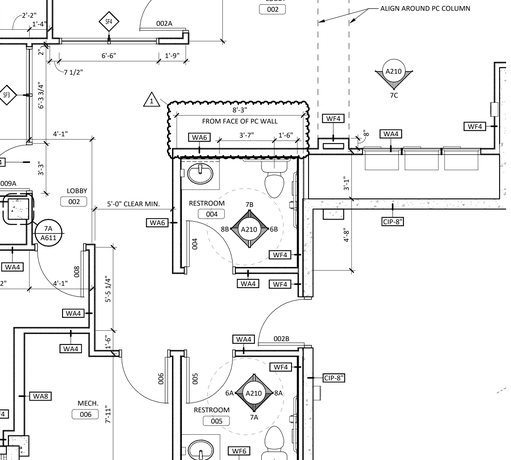

3D A210 TRASH ENCLOSURE
SCALE: 1/4" = 1'-0"

5A A210 COMMUNITY ROOM
SCALE: 1/4" = 1'-0"

SHEET MATERIAL ID LIST

MATERIAL ID	SPEC SECTION & DESCRIPTION
FRIDGE-1	11 3100 - REFRIGERATOR
GRAB BAR-18	10 2800 - STAINLESS STEEL GRAB BAR, 18"
GRAB BAR-36	10 2800 - STAINLESS STEEL GRAB BAR, 36"
GRAB BAR-42	10 2800 - STAINLESS STEEL GRAB BAR, 42"
MET FAB-10	05 5000 - WIRE MESH
MICROWAVE-2	11 3100 - MICROWAVE
MIRROR-50	10 2800 - FRAMELESS MIRROR
MT-1	09 3000 - METAL TRIM
MT-2	09 3000 - METAL TRIM
NPKN DISP-1	10 2800 - SANITARY NAPKIN DISPOSAL UNIT
PLAM CTOP-2	12 3600 - PLASTIC LAMINATE COUNTERTOP
PT-1	09 9123 - PAINT
RANGE HD-1	11 3100 - RANGE HOOD
RANGE-1	11 3100 - RANGE
SOAP DISP-1	10 2800 - SOAP DISPENSER, WALL MOUNTED
SSM-1	12 3600 - 1/2" SOLID SURFACE COUNTERTOP
T-1	09 3000 - CERAMIC TILE
T-2	09 3000 - CERAMIC TILE
T-3	09 3000 - CERAMIC TILE
TB-1	09 3000 - CERAMIC TILE BASE
TP DISP-1	10 2800 - TOILET PAPER DISPENSER, SINGLE ROLL, SURFACE MOUNT
WD BASE-1	06 2000 - WOOD BASE
WD CASE-1	06 4100 - WOOD CASEWORK
WD CASE-2	06 4100 - WOOD CASEWORK
WD SHTG-30	06 1000 - 1/2" PLYWOOD; GRADE C-C

(XX) INT. ELEVATION KEYNOTES

KEYNOTE	DESCRIPTION
01	REMOVABLE BASE CABINET FRONT WITH INTEGRAL TOE KICK AT SINK

INT. ELEVATION GENERAL NOTES

A. REFER TO A620 & A621 FOR STANDARD CASEWORK ELEVATIONS AND CONSTRUCTION.
B. ALL WALL SURFACES TO BE <PT-1> UNLESS NOTED OTHERWISE.
C. PROVIDE WALL REINFORCEMENT AT ALL WALL MOUNTED ITEMS.
D. ANY EXPOSED CABINET EDGE SHALL BE FINISHED EDGE TO MATCH ADJACENT CABINET FINISH.
E. PAINT ALL EXPOSED (VISIBLE) DUCTWORK ABOVE THE CEILING LINE OF CLOUDS <PT-1>.
F. SEE SHEET G120 FOR ALL TOILET RIM HEIGHTS AND ACCESSORY MOUNTING HEIGHTS.
G. PROVIDE BLOCKING AT ALL TOILETS, TUBS, AND SHOWERS FOR FUTURE GRAB BAR INSTALLATION. REFER TO SHEET G120 FOR MOUNTING HEIGHTS.

(XX) FLOOR PLAN KEYNOTES

KEYNOTE	DESCRIPTION
01	LOUVER. VERIFY WIDTH WITH MECHANICAL.
02	WASHER TO BE INSTALLED TO THE LEFT OF THE DRYER.
03	DOWNSPOUT WITH PRECAST CONCRETE SPLASHBLOCK.
04	SCUPPER AND DOWNSPOUT
05	UNIT 2E TO USE <WASH DRY-1>, RUN <WIRE STOR-1> ADJACENT TO MACHINE ON PLUMBING WALL.
06	FLOOR DRAIN, SLOPE FLOORS TO DRAINS.
07	MOP BASIN AND <FRP-1> PANELS SURRODUNDING BASIN FOR 48" UP TO 48" AFF.
08	PROVIDE LEVEL OF DISCHARGE STOP GATE
09	REFER TO 4E/A620 FOR TYPICAL SHELVING ELEVATIONS
10	KNOX BOX. MOUNT 6'-0" ABOVE FINISH FLOOR AT EXTERIOR.
11	ADA DOOR OPERATOR PUSH PAD TO BE MOUNTED 30" FROM FINISH FLOOR MEASURED TO THE BOTTOM OF THE PLATE AND NO MORE THAN 36" ABOVE FINISH FLOOR MEASURED TO THE TOP OF THE PLATE. LOCATE CENTERLINE OF PUSH PAD 24" BEYOND THE DOOR MINIMUM.
12	RADON VENT PIPE; SEE MECHANICAL
13	SCUPPER AND OVERFLOW SCUPPER
14	PROVIDE OPENING IN MASONRY FOR OPEN DRAINAGE. ONE COURSING IN HEIGHT, 1'-0" MINIMUM IN WIDTH.
15	PROVIDE FIRE TREATED FRAMING AT PARAPET WALL.
16	TRASH AND RECYCLING CHUTES TO HAVE 90 MINUTE RATED ACCESS DOORS.
17	MAINTAIN 12" BETWEEN WINDOW JAMBS (10" MINIMUM PER STRUCTURAL)

FLOOR PLAN GENERAL NOTES

A. FOR TYPICAL BARRIER FREE TOILET ROOM TYPES AND ACCESSORIES REQUIREMENTS AND LOCATIONS SEE DWG G120.
B. FOR TYPICAL HOUSEKEEPING CLOSETS ACCESSORIES REQUIREMENTS AND MOUNTING LOCATIONS SEE SHEET G120.
C. ALL PARTITION TYPES ARE "WA4" TYPICALLY UNLESS OTHERWISE NOTED.
D. COORDINATE PARTITION FIRE RATED REQUIREMENTS AS INDICATED ON REFLECTED CEILING PLANS - DRAWING SERIES A700.
E. TYPICALLY INSTALL SOAP DISPENSERS AND PAPER TOWEL DISPENSER AT ALL SINKS UNLESS NOTED OTHERWISE.
F. PROVIDE WALL REINFORCEMENT PER SHEET G120 AT WALL-MOUNTED SHELVES AND STORAGE UNITS, MARKER BOARDS, BULLETIN BOARDS, TACK BOARDS, TELEVISIONS AND OTHER CONTRACTOR OR OWNER FURNISHED WALL-MOUNTED ITEMS (REFER TO ACCESSORIES AND EQUIPMENT SCHEDULE) SEE SHEET G120.
G. FOR ALL CARPET TYPE CHANGES BETWEEN ROOMS, TRANSITION SHALL OCCUR AT CENTERLINE OF DOOR PANEL TYPICALLY - U.N.O. SEE SHEET A601.
H. COORDINATE DIMENSIONS W/ ASTERISK (E - "X'-X") W/ EQUIPMENT VENDOR.
I. ALL DIMENSIONS ARE TO FACE OF GYPSUM BOARD OR MASONRY UNLESS OTHERWISE NOTED.
J. COORDINATE ALL FLOOR OPENING DIMENSIONS AND CLEARANCES FOR DUCTWORK W/ MECHANICAL CONTRACTOR - TYPICAL.
K. AT VANITY SINK BASE, EXTEND FINISH FLOOR, FINISH WALL & PROVIDE FINISHED INTERIOR CABINETS' SIDES.
L. AT SINK BASE CABINET, EXTEND FINISH FLOOR, FINISH WALL, PROVIDE FINISHED INTERIOR CABINET SIDES & INSTALL END PANEL AT DISHWASHER.
M. CONCEALED SPACES ARE TO HAVE GYP BD INSTALLED ON BOTH SIDES OF PARTITION OR FULLY FILLED WITH BLOWN-IN INSULATION.
N. ALL HALLWAYS IN UNITS ARE REQUIRED TO BE 42" IN WIDTH MINIMUM.

JLG architects
322 1st Ave N, Suite #600
Minneapolis, MN 55401
phone 6 1 2.7 4 6.4 2 6 0
facsimile 6 1 2.7 4 6.4 7 5 4
www.jlgarchitects.com
copyright © 2020

REVISION SCHEDULE

NO.	DESCRIPTION	DATE
1	PR 02	9/21/20

I HEREBY CERTIFY THAT THIS PLAN WAS PREPARED BY ME OR UNDER MY DIRECT SUPERVISION AND THAT I AM A DULY REGISTERED ARCHITECT UNDER THE LAWS OF THE STATE OF MINNESOTA

NICOLE WASHBURN, AIA
46546 REG. NO
9/21/2020 DATE

LWO DEVELOPMENT, LLC
# EASTGATE APARTMENTS
OWATONNA, MN

DATE 06/19/2020
PHASE CONSTRUCTION DOCUMENTS
PROJECT 18126
SHEET **A210**
ENLARGED PLANS AND ELEVATIONS

11/24/2020 12:02:02 PM

DOOR SCHEDULE

DOOR NUMBER	HW SET	RATING	ROOM NAME	SIZE WIDTH	SIZE HEIGHT	SIZE THK	DOORS MAT'L	DOORS TYPE	DOORS FINISH	DOORS GLZ	FRAME MAT'L	FRAME TYPE	FRAME FINISH	FRAME GLZ	DETAILS JAMB	DETAILS HEAD	DETAILS SILL	NOTES	REVISION
GROUND FLOOR																			
001	333.0	--	VESTIBULE	3' - 0"	7' - 0" (2)	1 3/4"	ALUM.	FG	PREFINISH	SEE ELEV.	ALUM.	TAG # HERE	PREFINISH	SEE ELEV.	SEE ELEV.	SEE ELEV.	--		
002A	238.0	--	VESTIBULE	3' - 0"	7' - 0"	1 3/4"	ALUM.	FG	PREFINISH	SEE ELEV.	ALUM.	TAG # HERE	PREFINISH	SEE ELEV.	SEE ELEV.	SEE ELEV.	--		
002B	158.0	90MIN	LOBBY	3' - 0"	7' - 0"	2"	HM	F	PREFINISH	--	HM	1A	--	--	3A/A220	2A/A220	--		
004	12.0	--	RESTROOM	3' - 0"	7' - 0"	2"	WD	F	PREFINISH	--	REDI	1	--	--	2B/A220	1B/A220	--		PR 02
005	12.0	--	RESTROOM	3' - 0"	7' - 0"	2"	WD	F	PREFINISH	--	REDI	1	--	--	2B/A220	1B/A220	--		PR 02
006	14.0	--	MECH.	3' - 0"	7' - 0" (2)	2"	WD	F	PREFINISH	--	REDI	1	--	--	2B/A220	1B/A220	--		PR 02
007	4.0	--	OFFICE	3' - 0"	7' - 0" (2)	1 3/4"	WD	F	PREFINISH	--	REDI	1	--	--	2B/A220	1B/A220	--		
008	5.0	--	OFFICE	3' - 0"	7' - 0" (2)	2"	WD	FG	PT-4	--	REDI	1	--	--	2B/A220	1B/A220	--		PR 02
009A	213.0	--	LOBBY	3' - 0"	7' - 0" (2)	1 3/4"	ALUM.	FG	PREFINISH	SEE ELEV.	ALUM.	1	PREFINISH	SEE ELEV.	SEE ELEV.	SEE ELEV.	--		PR 02
009B			COMMUNITY ROOM	3' - 8"	7' - 0"		WD		PREFINISH		HM	1	--		2B/A220	1B/A220			PR 02
010	14.0	--	ELECTRICAL/ TELECOM	3' - 0"	7' - 0" (2)	2"	WD	F	PREFINISH	--	REDI	1	--	--	2B/A220	1B/A220	--		
011	14.0	20MIN (1)	DOMESTIC WATER & FIRE RISER	3' - 0"	7' - 0"	2"	HM	F	PT	--	HM	1A	PT	--	3A/A220	2A/A220	--		PR 02
012	14.2	90MIN	SUMP PUMP	3' - 0"	7' - 0"	2"	HM	F	PT	--	HM	1A	PT	--	3A/A220	2A/A220	--		PR 02
014			GARAGE	16' - 0"	8' - 0" (2)	2"	STL	OHS	--	--	STL	SL	--	--	3C/A220	2C/A220	4C/A220	PUSH BUTON PROXIMITY READER	PR 02
015	14.0	45MIN (1)	STORAGE	3' - 0"	7' - 0"	2"	HM	F	PT	--	HM	1A	PT	--	3A/A220	2A/A220	--		PR 02
ST1-0	131.2	90MIN	STAIR 1	3' - 0"	7' - 0"	2"	HM	F	PT	--	HM	1A	PT	--	3A/A220	2A/A220	--		
ST2-0.1	130.0	--	STAIR 2	3' - 0"	7' - 0"	1 3/4"	HM	F	PT	--	HM	1A	PT	--	4B/A311	4C/A311	--	EXIT ONLY	
ST2-0.2	131.2	90MIN	STAIR 2	3' - 0"	7' - 0"	2"	HM	F	PT	--	HM	1A	PT	--	3A/A220	2A/A220	--		
T1	--	--		8' - 0"	7' - 0"	1 3/4"	WD	F-F	PREFINISH	--	-	1	--	--	--	--	--		PR 02
FIRST FLOOR																			
150	31.2	90MIN	CORRIDOR	3' - 0"	7' - 0" (2)	2"	WD	F	PREFINISH	--	HM	2	--	W-120	2B/A220	1B/A220	--	FIRE FRAME	PR 02
150A	368.0	--	CORRIDOR	3' - 0"	7' - 0"	1 3/4"	ALUM.	FG	PREFINISH	SEE ELEV.	ALUM.	1	--	SEE ELEV.	4B/A220	5B/A220	6B/A512		
150B	368.0	--	CORRIDOR	3' - 0"	7' - 0"	1 3/4"	ALUM.	FG	PREFINISH	SEE ELEV.	ALUM.	1	--	SEE ELEV.	4B/A220	5B/A220	6B/A512		
151	13.0	20MIN	FITNESS	3' - 0"	7' - 0"	2"	WD	F	PREFINISH	--	HM	2	--	D-H-OH-20	2B/A220	1B/A220	--	ALTERNATE: HW SET 18.0	PR 02
152	14.2	20MIN	CUST. CLOSET	3' - 0"	7' - 0"	2"	WD	F	PREFINISH	--	REDI	1	--	--	2B/A220	1B/A220	--		
153	14.2	20MIN	MECH.	3' - 0"	7' - 0"	2"	WD	F	PREFINISH	--	REDI	1	--	--	2B/A220	1B/A220	--		
154	21.0	60MIN	TRASH ROOM	6' - 0"	7' - 0"	1 3/4"	WD	F-F	PREFINISH	--	REDI	1	--	--	2B/A220	1B/A220	--		PR 02
ELEV1	31.3	60MIN	ELEV.	3' - 6"	7' - 0"	1 3/4"	WD	F	PREFINISH	--	REDI	1	--	--	4A/A423	7C/A423	6D/A423		
ST1-1	31.1	90MIN	STAIR 1	3' - 0"	7' - 0"	2"	WD	F	PREFINISH	--	REDI	1	--	--	2B/A220	1B/A220	--		
ST2-1	31.1	90MIN	STAIR 2	3' - 0"	7' - 0"	2"	WD	F	PREFINISH	--	REDI	1	--	--	2B/A220	1B/A220	--	ALTERNATE: HW SET 38.0	
SECOND FLOOR																			
251	11.0	20MIN	STORAGE	3' - 0"	7' - 0"	2"	WD	F	PREFINISH	--	REDI	1	--	--	2B/A220	1B/A220	--		
252	14.2	20MIN	CORRIDOR	3' - 0"	7' - 0"	2"	WD	F	PREFINISH	--	REDI	1	--	--	2B/A220	1B/A220	--		
253	14.2	20MIN	MECH.	3' - 0"	7' - 0"	2"	WD	F	PREFINISH	--	REDI	1	--	--	2B/A220	1B/A220	--		
254.1	14.2	90MIN	TRASH & RECYCLING CHUTE	2' - 6"	7' - 0"	1 3/4"	WD	F	PREFINISH	--	REDI	1	--	--	2B/A220	1B/A220	--		
254.2	14.2	90MIN	TRASH & RECYCLING CHUTE	2' - 6"	7' - 0"	1 3/4"	WD	F	PREFINISH	--	REDI	1	--	--	2B/A220	1B/A220	--		
256	14.2	60MIN	ELEC.	3' - 0"	7' - 0"	1 3/4"	WD	F	PREFINISH	--	REDI	1	--	--	2B/A220	1B/A220	--		
ELEV2	31.3	60MIN	ELEV.	3' - 6"	7' - 0"	1 3/4"	WD	F	PREFINISH	--	REDI	1	--	--	4A/A423	7C/A423	6D/A423		
ST1-2	31.1	90MIN	STAIR 1	3' - 0"	7' - 0"	1 3/4"	WD	F	PREFINISH	--	REDI	1	PREFINISH	--	2B/A220	1B/A220	--	ALTERNATE: HW SET 38.0	PR 02
ST2-2	31.1	90MIN	STAIR 2	3' - 0"	7' - 0"	2"	WD	F	PREFINISH	--	REDI	1	--	--	2B/A220	1B/A220	--	ALTERNATE: HW SET 38.0	
THIRD FLOOR																			
351	11.0	20MIN	STORAGE	3' - 0"	7' - 0"	2"	WD	F	PREFINISH	--	REDI	1	--	--	2B/A220	1B/A220	--		
352	14.2	20MIN	CUST. CLOSET	3' - 0"	7' - 0"	2"	WD	F	PREFINISH	--	REDI	1	--	--	2B/A220	1B/A220	--		
353	14.2	20MIN	MECH.	3' - 0"	7' - 0"	2"	WD	F	PREFINISH	--	REDI	1	--	--	2B/A220	1B/A220	--		
354.1	14.2	90MIN	TRASH CHUTE	2' - 6"	7' - 0"	1 3/4"	WD	F	PREFINISH	--	REDI	1	--	--	2B/A220	1B/A220	--		PR 01
354.2	14.2	90MIN	TRASH CHUTE	2' - 6"	7' - 0"	1 3/4"	WD	F	PREFINISH	--	REDI	1	--	--	2B/A220	1B/A220	--		PR 01
355	313.0	20MIN	COMMUNITY TERRACE	3' - 0"	7' - 0"	1 3/4"	ALUM.	FG	PREFINISH	SEE ELEV.	ALUM.	TAG # HERE	--	SEE ELEV.	--	--	--	ALTERNATE: HW SET 318.0, RATE SIDELIGHT D-H-OH-20	PR 01
357	14.2	20MIN	STOR.	3' - 0"	7' - 0"	2"	WD	F	PREFINISH	--	REDI	1	--	--	2B/A220	1B/A220	--		
ELEV3	31.3	60MIN	ELEV.	3' - 6"	7' - 0"	1 3/4"	WD	F	PREFINISH	--	REDI	1	--	--	4A/A423	7C/A423	6D/A423		
ST1-3	31.1	90MIN	STAIR 1	3' - 0"	7' - 0"	2"	WD	F	PREFINISH	--	REDI	1	--	--	2B/A220	1B/A220	--	ALTERNATE: HW SET 38.0	
ST2-3	31.1	90MIN	STAIR 2	3' - 0"	7' - 0"	2"	WD	F	PREFINISH	--	HM	1A	--	--	2B/A220	1B/A220	--	ALTERNATE: HW SET 38.0	

UNIT DOOR SCHEDULE

Type Mark	HW SET	RATING	SIZE WIDTH	SIZE HEIGHT	SIZE THK	DOORS MAT'L	DOORS TYPE	DOORS FINISH	DOORS GLZ	FRAME REDI&	FRAME TYPE	FRAME FINISH	FRAME GLZ	DETAILS JAMB	DETAILS HEAD	DETAILS SILL	NOTES	REVISION
A2	91.0	--	2' - 0"	6' - 8"	0' -1 1 3/4"	WD	F	--	--	REDI	1	PREFINISH	--	2B/A220	1B/A220	--		
A3	91.0 / 92.0	--	3' - 0"	6' - 8"	0' -1 3/4"	WD	F	--	--	REDI	1	PREFINISH	--	2B/A220	1B/A220	--	91.0 TYP SINGLE DOOR CLOSET; 92.0 TYP BEDROOM & BATHROOM	
B2	91.1	--	5' - 0"	6' - 8"	0" - 1 3/4"	WD	F-F	--	--	REDI	1	PREFINISH	--	2B/A220	1B/A220	--		
B3	91.1	--	4' - 0"	6' - 8"	0' -1 3/4"	WD	F-F	--	--	REDI	1	PREFINISH	--	2B/A220	1B/A220	--		
B7	313.0	20MIN	3' - 0"	7' - 0"	0' - 1 3/4"	ALUM.	FG	PREFINISH	SEE ELEV.	ALUM.	TAG # HERE	--	SEE ELEV.	--	--	--	ALTERNATE: HW SET 318.0, RATE SIDELIGHT D-H-OH-20	PR 01
BD1	93.0*		3' - 0"	6' - 8"	0' - 1 3/4"	ALUM.	-			REDI	1	PREFINISH	--	2B/A220	1B/A220			
E	90.0	20MIN	3' - 0"	7' - 0"	0' -1 3/4"	WD	F	PT-4	--	HM	1	PT-4	--	2B/A220	1B/A220	--	ALTERNATE #15 HW SET 98.0, ALTERNATE #22 UNIT DOORS TO BE <PT-4>	
E2	--	--	3' - 0"	7' - 0"	0' - 1 3/4"	VINYL	FG	PREFINISH	INSUL TEMP GL-1	VINYL	1	PREFINISH	--	5B/A220	4B/A220	7A/A220	SWING PATIO DOOR - ALTERNATE #9	
E3		--	7' - 0"	6' - 10"	0' - 1 3/4"	VINYL	FG-FG	PREFINISH	INSUL TEMP GL-1	VINYL	1 RE	PREFINISH		5B/A220	4B/A220	5A/A220	SLIDING PATIO DOOR	

SHEET MATERIAL ID LIST

MATERIAL ID	SPEC SECTION & DESCRIPTION
GYP BD-1	09 2116 - 5/8" FIRE-RATED TYPE 'X' GYPSUM BOARD
INSUL-36	07 2119 - CLOSED CELL SPRAY FOAM INSULATION
MAS ACC-2	04 2000 - POLYMER MESH HEAD JOINT WEEP
MAS ACC-5	04 2000 - CAVITY MORTAR CONTROL MESH
MET FAB-50	05 5913 - METAL BALCONIES
SEALANT-1	07 9200 - JOINT SEALANT OR CAULKING
SEALANT-2	07 9200 - JOINT SEALANT OR CAULKING WITH BACKER ROD
SIDING-20	07 4646 - MANUFACTURED WOOD TRIM OR FIBER CEMENT BOARD TRIM
SMF-2	07 6200 - PREFINISHED ALUMINUM FLASHING
TWF-1	04 2000 - 40 MIL SELF-ADHERING MEMBRANE W/ STAINLESS STEEL DRIP
VPR RET-10	07 2500 - VAPOR RETARDER; SELF-ADHERED OR LIQUID APPLIED

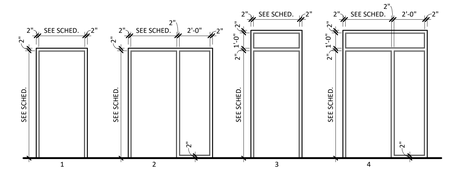

4D A220 FRAME TYPES
SCALE: 1/4" = 1'-0"

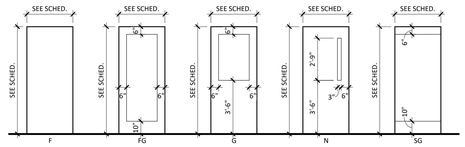

2D A220 DOOR TYPES
SCALE: 1/4" = 1'-0"

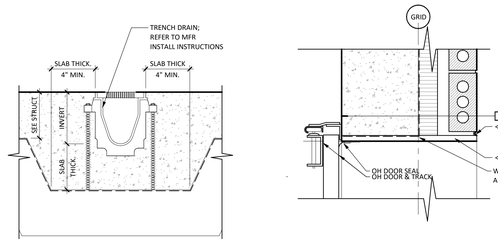

4C A220 TRENCH DRAIN DETAIL
SCALE: 1 1/2" = 1'-0"

3C A220 DETAIL @ OH DOOR JAMB
SCALE: 1 1/2" = 1'-0"

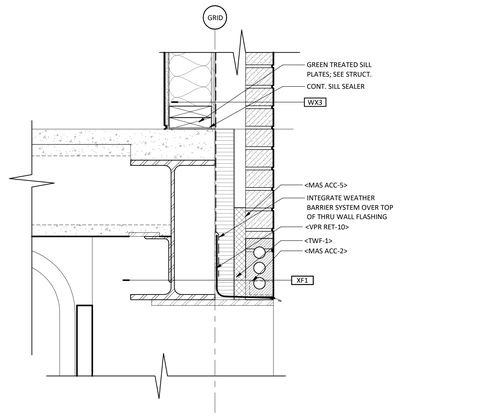

2C A220 DETAIL @ OH DOOR HEAD
SCALE: 1 1/2" = 1'-0"

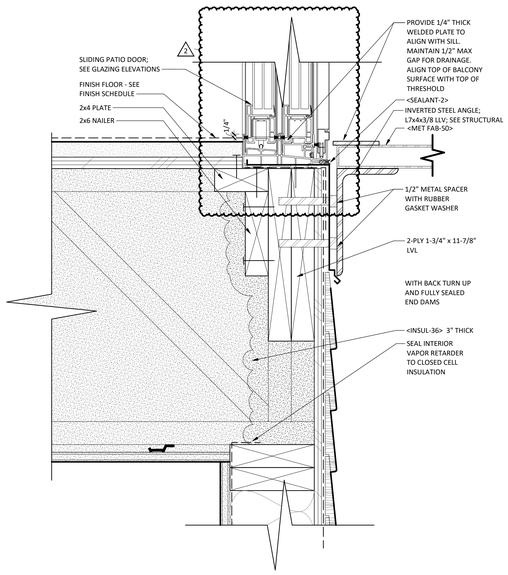

7A A220 TYPE A SLIDING DOOR SILL
SCALE: 3" = 1'-0"

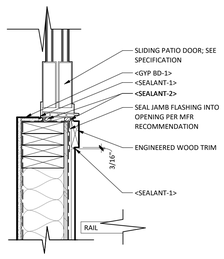

5B A220 WX1 - PATIO DOOR JAMB
SCALE: 1 1/2" = 1'-0"

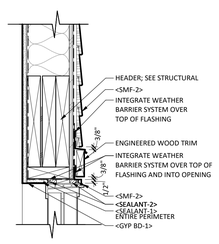

4B A220 WX1 - SLIDING DOOR HEAD
SCALE: 1 1/2" = 1'-0"

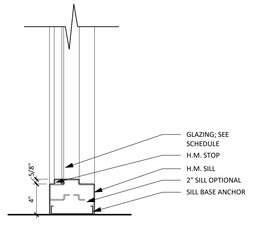

3B A220 H.M. SILL @ SIDELITE
SCALE: 1 1/2" = 1'-0"

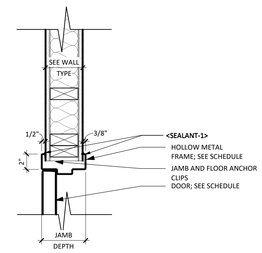

2B A220 H.M JAMB @ GYPSUM BOARD
SCALE: 1 1/2" = 1'-0"

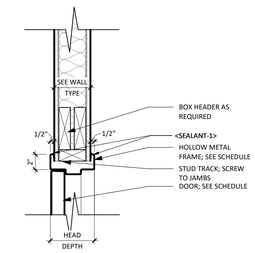

1B A220 H.M HEAD @ GYPSUM BOARD
SCALE: 1 1/2" = 1'-0"

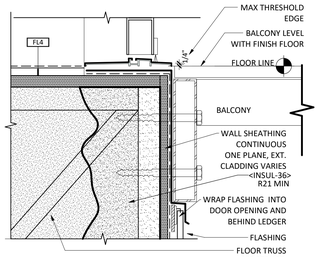

5A A220 SWING DOOR AT PATIO - ALTERNATE 9
SCALE: 3" = 1'-0"

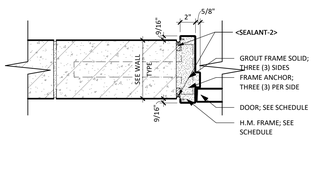

3A A220 H.M. JAMB @ MASONRY OPTION 2
SCALE: 1 1/2" = 1'-0"

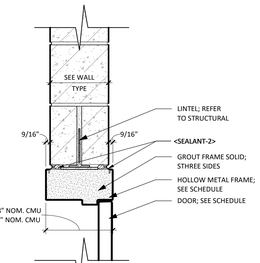

2A A220 H.M. HEAD @ MASONRY OPTION 2
SCALE: 1 1/2" = 1'-0"

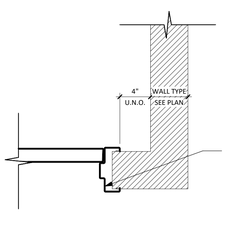

1A A220 TYP DOOR LOCATION PLAN
SCALE: 1 1/2" = 1'-0"

JLG architects
322 1st Ave N, Suite #600
Minneapolis, MN 55401
phone 6 1 2.7 4 6.4 2 6 0
facsimile 6 1 2.7 4 6.4 7 5 4
www.jlgarchitects.com
copyright © 2020

REVISION SCHEDULE

NO.	DESCRIPTION	DATE
1	ADDENDUM #1	06/30/20
2	PR 02	9/21/20

I HEREBY CERTIFY THAT THIS PLAN WAS PREPARED BY ME OR UNDER MY DIRECT SUPERVISION AND THAT I AM A DULY REGISTERED ARCHITECT UNDER THE LAWS OF THE STATE OF MINNESOTA

NICOLE WASHBURN, AIA 46546 REG. NO
9/21/2020 DATE

LWO DEVELOPMENT, LLC
# EASTGATE APARTMENTS
OWATONNA, MN

DATE 06/19/2020
PHASE CONSTRUCTION DOCUMENTS
PROJECT 18126
SHEET A220
DOOR SCHEDULE

1/24/2020, 12:02:09 PM



7C A301 NORTH ELEVATION
SCALE: 1/8" = 1'-0"



7A A301 WEST ELEVATION
SCALE: 1/8" = 1'-0"

SHEET MATERIAL ID LIST

MATERIAL ID	SPEC SECTION & DESCRIPTION
BRICK-1	04 2000 - FACE BRICK
MET FAB-1	05 5000 - STEEL BOLLARD, WITH CONCRETE FILL
MET FAB-50	05 5913 - METAL BALCONIES
RF VENT-1	07 3113 - SHINGLE-OVER RIDGE VENT
SHINGLE-1	07 3113 - LAMINATED FIBERGLASS SHINGLES
SIDING-15	07 4646 - FIBER CEMENT PANEL
SIDING-70	07 4623 - FIBER CEMENT LAP SIDING - ALTERNATE #11, SEE SPEC.
SIDING-71	07 4623 - FIBER CEMENT SHINGLE SIDING - ALTERNATE #11, SEE SPEC.
SMF-2	07 6200 - PREFINISHED ALUMINUM FLASHING

XX EXT. ELEVATIONS KEYNOTE

KEYNOTE	DESCRIPTION
01	1x6 STANDARD TRIM BOARD BY SIDING MANUFACTURER. TYPICAL AT ALL EXTERIOR CORNERS, WINDOWS, AND DOORS FOR WALL TYPE 'WX1'.
02	1x12 STANDARD TRIM BOARD BY SIDING MANUFACTURER.
03	AREA WELL; COORDINATE FINAL HEIGHT WITH CIVIL. TOP OF WALL SHALL BE 6" ABOVE FINISH GRADE MINIMUM.
04	CONTINUOUS GUTTER
05	DOWNSPOUT TO MATCH GUTTER. PROVIDE PRECAST CONCRETE SPLASH BLOCK AT EACH DOWNSPOUT.
06	1x12 STANDARD TRIM BOARD BY SIDING MANUFACTURER.
07	CENTER PANEL JOINTS ON COLUMN. WHEN NOT DIRECTLY ABOVE A COLUMN, CENTER JOINT IN SPAN

EXT. ELEVATION GENERAL NOTES

A. REFER TO GLAZING ELEVATIONS FOR STOREFRONT ELEVATIONS.
B. MATCH EXTERIOR LOUVERS TO AND MECHANICAL PENETRATIONS TO ADJECENT COLORS.

REVISION SCHEDULE

NO.	DESCRIPTION	DATE
1	ASI 01	11/09/20

JLG architects
322 1st Ave N, Suite #600
Minneapolis, MN 55401
phone 6 1 2.7 4 6.4 2 6 0
facsimile 6 1 2.7 4 6.4 7 5 4
www.jlgarchitects.com
copyright © 2020

I HEREBY CERTIFY THAT THIS PLAN WAS PREPARED BY ME OR UNDER MY DIRECT SUPERVISION AND THAT I AM A DULY REGISTERED ARCHITECT UNDER THE LAWS OF THE STATE OF MINNESOTA

NICOLE WASHBURN, AIA — REG. NO 46546 — DATE 9/21/2020

LWO DEVELOPMENT, LLC
# EASTGATE APARTMENTS
OWATONNA, MN

DATE 06/19/2020
PHASE CONSTRUCTION DOCUMENTS
PROJECT 18126
SHEET A301
EXTERIOR ELEVATIONS

11/24/2020 12:02:30 PM

SHEET MATERIAL ID LIST

MATERIAL ID	SPEC SECTION & DESCRIPTION
BRICK-1	04 2000 - FACE BRICK
MET FAB-50	05 5913 - METAL BALCONIES
RF VENT-1	07 3113 - SHINGLE-OVER RIDGE VENT
SHINGLE-1	07 3113 - LAMINATED FIBERGLASS SHINGLES
SIDING-15	07 4646 - FIBER CEMENT PANEL
SIDING-70	07 4623 - FIBER CEMENT LAP SIDING - ALTERNATE #11, SEE SPEC.
SIDING-71	07 4623 - FIBER CEMENT SHINGLE SIDING - ALTERNATE #11, SEE SPEC.
SMF-2	07 6200 - PREFINISHED ALUMINUM FLASHING



7C A302 SOUTH ELEVATION
SCALE: 1/8" = 1'-0"



7A A302 EAST ELEVATION
SCALE: 1/8" = 1'-0"

EXT. ELEVATIONS KEYNOTE

KEYNOTE	DESCRIPTION
01	1x6 STANDARD TRIM BOARD BY SIDING MANUFACTURER. TYPICAL AT ALL EXTERIOR CORNERS, WINDOWS, AND DOORS FOR WALL TYPE 'WX1'.
02	1x12 STANDARD TRIM BOARD BY SIDING MANUFACTURER.
03	AREA WELL; COORDINATE FINAL HEIGHT WITH CIVIL. TOP OF WALL SHALL BE 6" ABOVE FINISH GRADE MINIMUM.
04	CONTINUOUS GUTTER
05	DOWNSPOUT TO MATCH GUTTER. PROVIDE PRECAST CONCRETE SPLASH BLOCK AT EACH DOWNSPOUT.
06	1x12 STANDARD TRIM BOARD BY SIDING MANUFACTURER.
07	CENTER PANEL JOINTS ON COLUMN. WHEN NOT DIRECTLY ABOVE A COLUMN, CENTER JOINT IN SPAN

EXT. ELEVATION GENERAL NOTES

A. REFER TO GLAZING ELEVATIONS FOR STOREFRONT ELEVATIONS.
B. MATCH EXTERIOR LOUVERS TO AND MECHANICAL PENETRATIONS TO ADJECENT COLORS.

REVISION SCHEDULE

NO.	DESCRIPTION	DATE
1	PR 02	9/21/20

JLG architects
322 1st Ave N, Suite #600
Minneapolis, MN 55401
phone 6 1 2.7 4 6.4 2 6 0
facsimile 6 1 2.7 4 6.4 7 5 4
www.jlgarchitects.com
copyright © 2020

I HEREBY CERTIFY THAT THIS PLAN WAS PREPARED BY ME OR UNDER MY DIRECT SUPERVISION AND THAT I AM A DULY REGISTERED ARCHITECT UNDER THE LAWS OF THE STATE OF MINNESOTA

NICOLE WASHBURN, AIA — 46546 REG. NO — 9/21/2020 DATE

LWO DEVELOPMENT, LLC
EASTGATE APARTMENTS
OWATONNA, MN

DATE **06/19/2020**
PHASE CONSTRUCTION DOCUMENTS
PROJECT **18126**
SHEET **A302**
EXTERIOR ELEVATIONS

11/24/2020 12:02:52 PM

SHEET MATERIAL ID LIST

MATERIAL ID	SPEC SECTION & DESCRIPTION
ALUM STOR-1	08 4313 - ALUMINUM FRAMED STOREFRONT
BRICK-1	04 2000 - FACE BRICK
INSUL GL-1	08 8000 - 1" CLEAR INSULATED GLASS
INSUL TEMP GL-1	08 8000 - 1" CLEAR INSULATED TEMPERED GLASS
SIDING-20	07 4646 - MANUFACTURED WOOD TRIM OR FIBER CEMENT BOARD TRIM
TEMP GL-1	08 8000 - CLEAR TEMPERED GLASS, 1/4" THICK

7C A310 W15 (SINGLE HUNG)
SCALE: 1/4" = 1'-0"

6C A310 SF6
SCALE: 1/4" = 1'-0"

5C A310 SF5
SCALE: 1/4" = 1'-0"

4C A310 SF4 - INTERIOR STOREFRONT
SCALE: 1/4" = 1'-0"

3C A310 SF3 - INTERIOR STOREFRONT
SCALE: 1/4" = 1'-0"

2C A310 SF2 - INTERIOR STOREFRONT
SCALE: 1/4" = 1'-0"

1C A310 SF1
SCALE: 1/4" = 1'-0"

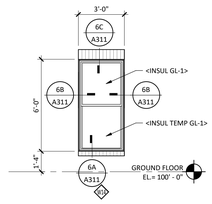

7B A310 W14 (SINGLE HUNG)
SCALE: 1/4" = 1'-0"

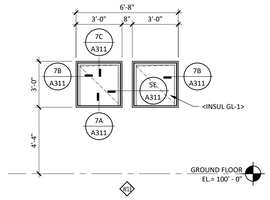

6B A310 W13
SCALE: 1/4" = 1'-0"

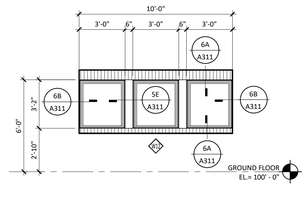

5B A310 W10
SCALE: 1/4" = 1'-0"

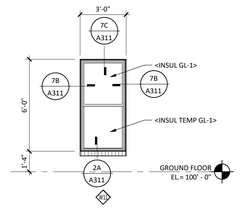

4B A310 W11 (SINGLE HUNG)
SCALE: 1/4" = 1'-0"

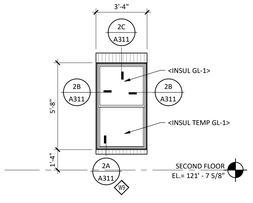

2B A310 W9 (SINGLE HUNG)
SCALE: 1/4" = 1'-0"

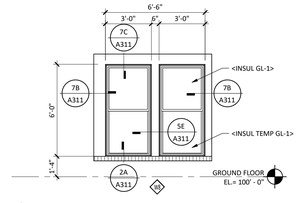

1B A310 W8 (SINGLE HUNG)
SCALE: 1/4" = 1'-0"

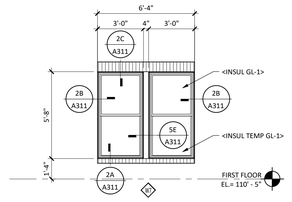

7A A310 W7 (SINGLE HUNG)
SCALE: 1/4" = 1'-0"

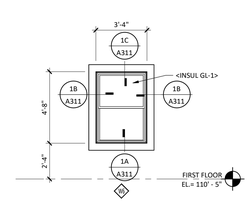

6A A310 W6 (SINGLE HUNG)
SCALE: 1/4" = 1'-0"

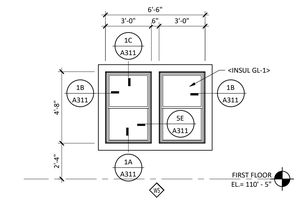

5A A310 W5 (SINGLE HUNG)
SCALE: 1/4" = 1'-0"

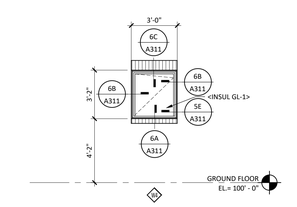

4A A310 W4
SCALE: 1/4" = 1'-0"

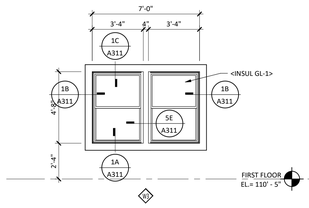

3A A310 W3 (SINGLE HUNG)
SCALE: 1/4" = 1'-0"

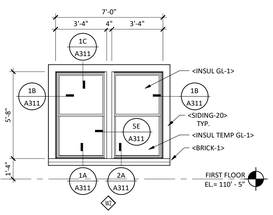

2A A310 W2 (SINGLE HUNG)
SCALE: 1/4" = 1'-0"

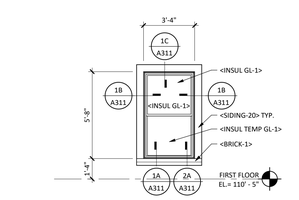

1A A310 W1 (SINGLE HUNG)
SCALE: 1/4" = 1'-0"

JLG architects
322 1st Ave N, Suite #600
Minneapolis, MN 55401
phone 6 1 2.7 4 6.4 2 6 0
facsimile 6 1 2.7 4 6.4 7 5 4
www.jlgarchitects.com

copyright © 2020

REVISION SCHEDULE

NO.	DESCRIPTION	DATE
1	PR 02	9/21/20
2	ASI 01	11/09/20

I HEREBY CERTIFY THAT THIS PLAN WAS PREPARED BY ME OR UNDER MY DIRECT SUPERVISION AND THAT I AM A DULY REGISTERED ARCHITECT UNDER THE LAWS OF THE STATE OF MINNESOTA

NICOLE WASHBURN, AIA
REG. NO 46546
DATE 9/21/2020

LWO DEVELOPMENT, LLC
# EASTGATE APARTMENTS
OWATONNA, MN

DATE 06/19/2020
PHASE CONSTRUCTION DOCUMENTS
PROJECT 18126
SHEET **A310**
GLAZING ELEVATIONS

11/24/2020 12:02:58 PM

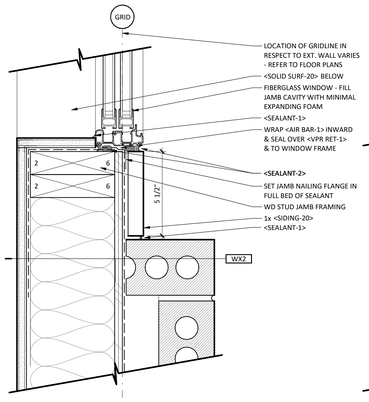

6E A311 DETAIL @ BRICK WDW JAMB W/ TRIM
SCALE: 3" = 1'-0"

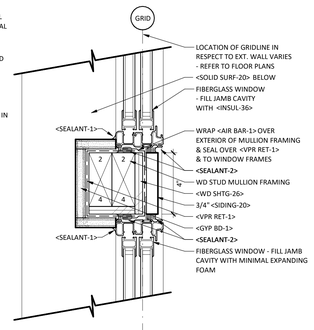

5E A311 DETAIL @ TYP. SIDING WDW MULLION
SCALE: 3" = 1'-0"

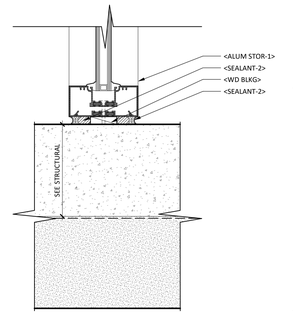

4E A311 INTERIOR SF SILL
SCALE: 3" = 1'-0"

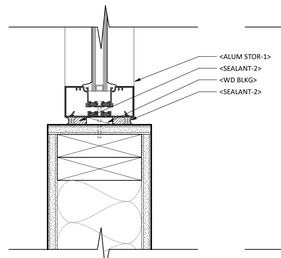

3E A311 INTERIOR SF JAMB
SCALE: 3" = 1'-0"

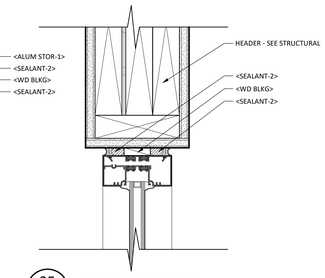

2E A311 INTERIOR SF HEAD
SCALE: 3" = 1'-0"

SHEET MATERIAL ID LIST

MATERIAL ID	SPEC SECTION & DESCRIPTION
AIR BAR-1	07 2500 - AIR BARRIER, MECHANICALLY FASTENED
ALUM STOR-1	08 4313 - ALUMINUM FRAMED STOREFRONT
BRICK TIE	04 2000 - BRICK TIE
GYP BD-1	09 2116 - 5/8" FIRE-RATED TYPE 'X' GYPSUM BOARD
INSUL-1	07 2100 - EXTRUDED POLYSTYRENE INSULATION W/ DRAINAGE CHANNELS
INSUL-36	07 2119 - CLOSED CELL SPRAY FOAM INSULATION
MAS ACC-2	04 2000 - POLYMER MESH HEAD JOINT WEEP
MAS ACC-5	04 2000 - CAVITY MORTAR CONTROL MESH
SEALANT-1	07 9200 - JOINT SEALANT OR CAULKING
SEALANT-2	07 9200 - JOINT SEALANT OR CAULKING WITH BACKER ROD
SIDING-10	07 4646 - FIBER CEMENT LAP SIDING
SIDING-20	07 4646 - MANUFACTURED WOOD TRIM OR FIBER CEMENT BOARD TRIM
SMF-2	07 6200 - PREFINISHED ALUMINUM FLASHING
SOLID SURF-20	12 3600 - 1/2" SOLID SURFACING
TWF-1	04 2000 - 40 MIL SELF-ADHERING MEMBRANE W/ STAINLESS STEEL DRIP
VPR RET-1	07 2500 - 6 MIL POLY VAPOR RETARDER SHEET
WD BLKG	06 1000 - WOOD BLOCKING
WD SHTG-26	06 1000 - 3/4" PLYWOOD WALL SHEATHING

JLG architects
322 1st Ave N, Suite #600
Minneapolis, MN 55401
phone 6 1 2.7 4 6.4 2 6 0
facsimile 6 1 2.7 4 6.4 7 5 4
www.jlgarchitects.com
copyright © 2020

REVISION SCHEDULE

NO.	DESCRIPTION	DATE

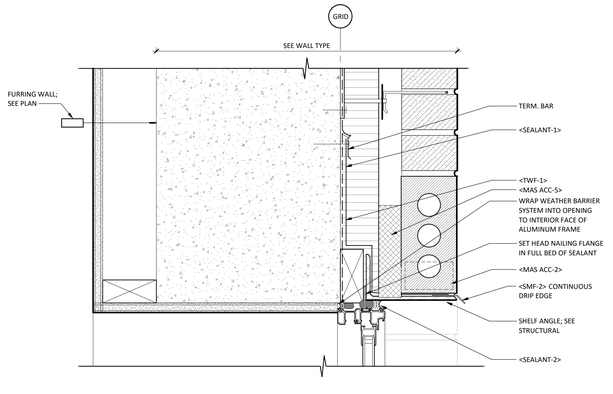

6C A311 DETAIL @ TYP. XF1 WDW HEAD
SCALE: 3" = 1'-0"

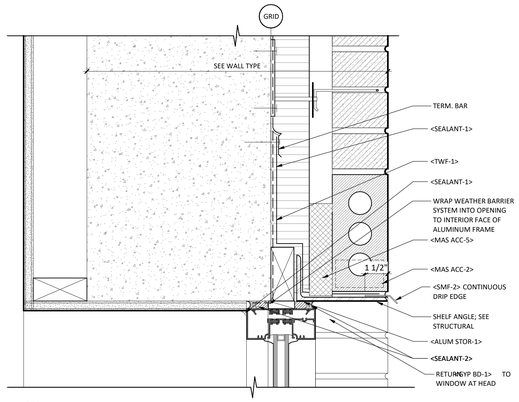

4C A311 DETAIL @ TYP. XF1 SF HEAD DETAIL
SCALE: 3" = 1'-0"

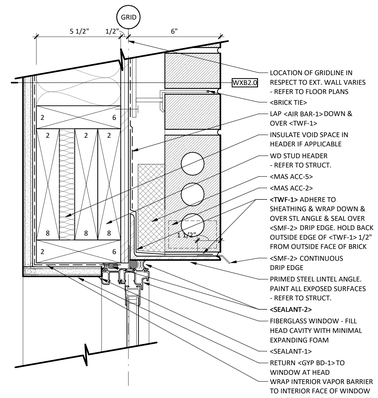

2C A311 DETAIL @ TYP. BRICK WDW HEAD
SCALE: 3" = 1'-0"

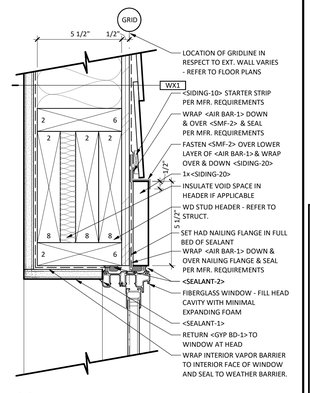

1C A311 DETAIL @ TYP. SIDING WDW HEAD
SCALE: 3" = 1'-0"

7C A311 DETAIL @ TYP. HARDIE BRD WDW HEAD
SCALE: 3" = 1'-0"

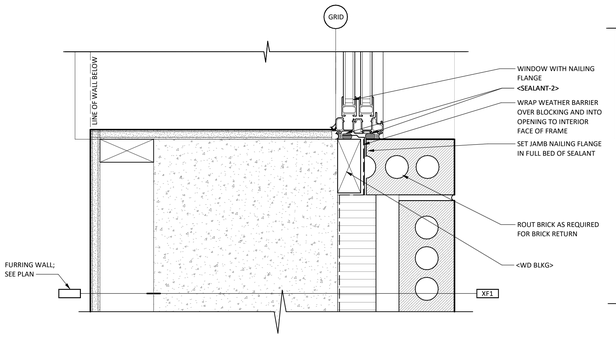

6B A311 DETAIL @ TYP. XF1 WDW JAMB
SCALE: 3" = 1'-0"

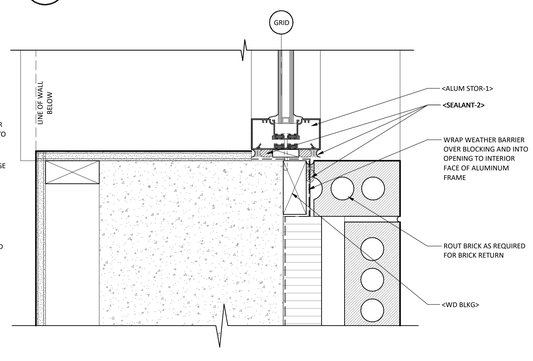

4B A311 DETAIL @ TYP XF1 SF JAMB DETAIL
SCALE: 3" = 1'-0"

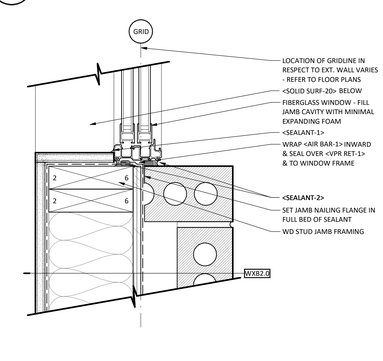

2B A311 DETAIL @ TYP. BRICK WDW JAMB
SCALE: 3" = 1'-0"

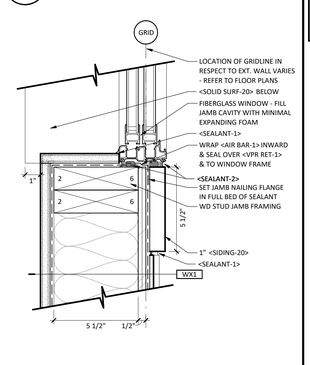

1B A311 DETAIL @ TYP. SIDING WDW JAMB
SCALE: 3" = 1'-0"

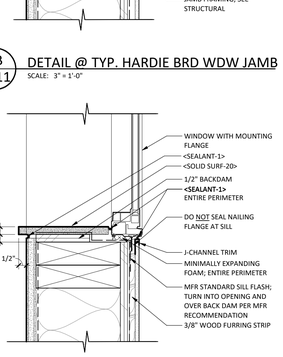

7B A311 DETAIL @ TYP. HARDIE BRD WDW JAMB
SCALE: 3" = 1'-0"

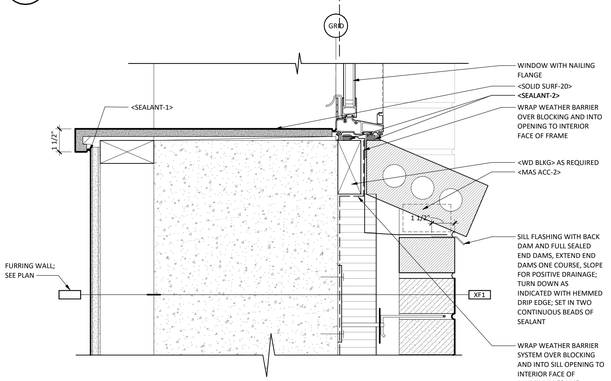

6A A311 DETAIL @ XF1 WDW SILL
SCALE: 3" = 1'-0"

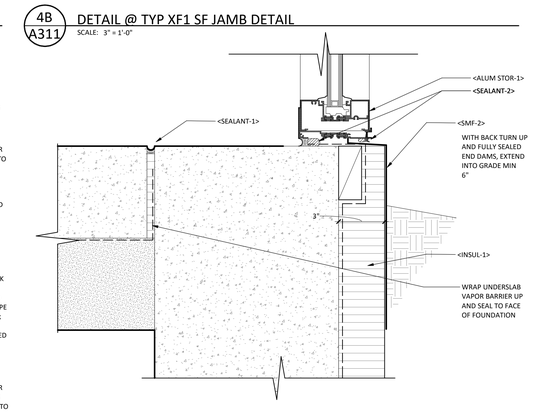

4A A311 SF - SILL @ GRADE
SCALE: 3" = 1'-0"

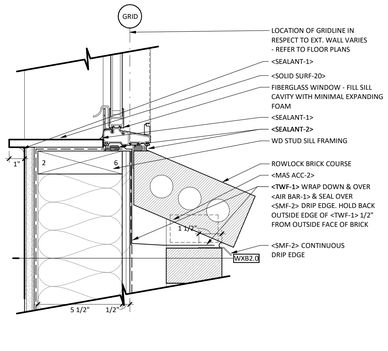

2A A311 DETAIL @ TYP. BRICK WDW SILL
SCALE: 3" = 1'-0"

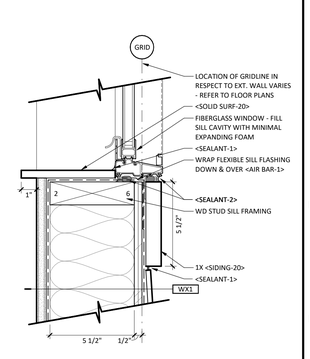

1A A311 DETAIL @ TYP. SIDING WDW SILL
SCALE: 3" = 1'-0"

I HEREBY CERTIFY THAT THIS PLAN WAS PREPARED BY ME OR UNDER MY DIRECT SUPERVISION AND THAT I AM A DULY REGISTERED ARCHITECT UNDER THE LAWS OF THE STATE OF MINNESOTA

NICOLE WASHBURN, AIA
46546
REG. NO
9/21/2020
DATE

LWO DEVELOPMENT, LLC
# EASTGATE APARTMENTS
OWATONNA, MN

DATE
06/19/2020
PHASE
CONSTRUCTION DOCUMENTS
PROJECT
18126
SHEET
A311
GLAZING DETAILS

11/24/2020 12:03:04 PM

SHEET MATERIAL ID LIST

MATERIAL ID	SPEC SECTION & DESCRIPTION

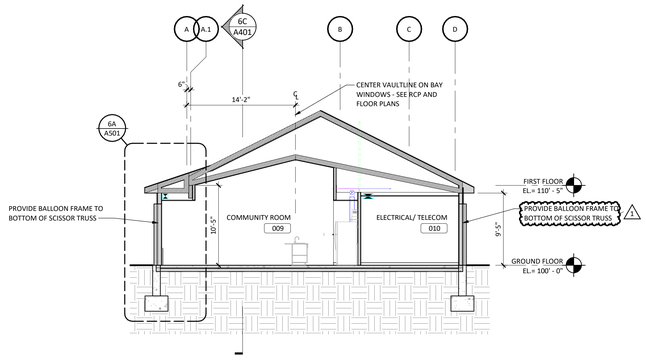

7C A401 BUILDING SECTION AT COMMUNITY ROOM
SCALE: 1/8" = 1'-0"



6C A401 BUILDING SECTION A
SCALE: 1/8" = 1'-0"



6A A401 BUILDING SECTION B
SCALE: 1/8" = 1'-0"

JLG architects

322 1st Ave N, Suite #600
Minneapolis, MN 55401
phone 6 1 2.7 4 6.4 2 6 0
facsimile 6 1 2.7 4 6.4 7 5 4
www.jlgarchitects.com

copyright © 2020

REVISION SCHEDULE

NO.	DESCRIPTION	DATE
1	PR 02	9/21/20

I HEREBY CERTIFY THAT THIS PLAN WAS PREPARED BY ME OR UNDER MY DIRECT SUPERVISION AND THAT I AM A DULY REGISTERED ARCHITECT UNDER THE LAWS OF THE STATE OF MINNESOTA

NICOLE WASHBURN, AIA — 46546 — 9/21/2020
REG. NO — DATE

LWO DEVELOPMENT, LLC
# EASTGATE APARTMENTS
OWATONNA, MN

DATE
06/19/2020

PHASE
CONSTRUCTION DOCUMENTS

PROJECT
18126

SHEET
A401
BUILDING SECTIONS

11/24/2020 12:00:13 PM

SHEET MATERIAL ID LIST

MATERIAL ID	SPEC SECTION & DESCRIPTION

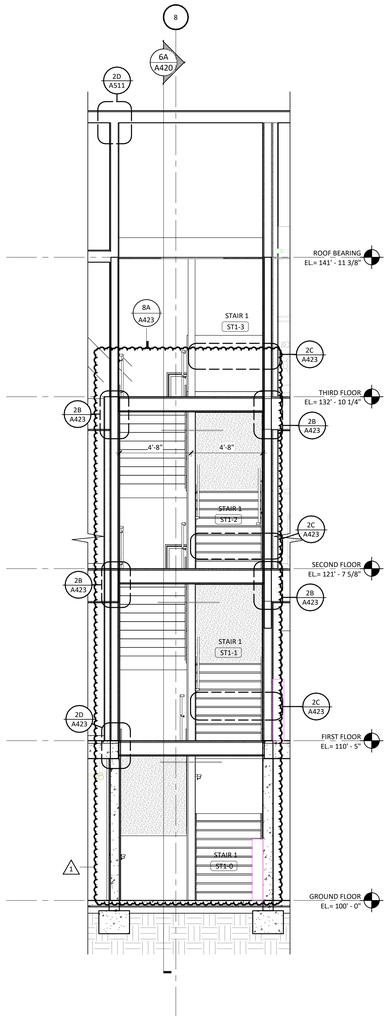

8A A420 Section 4
SCALE: 1/4" = 1'-0"

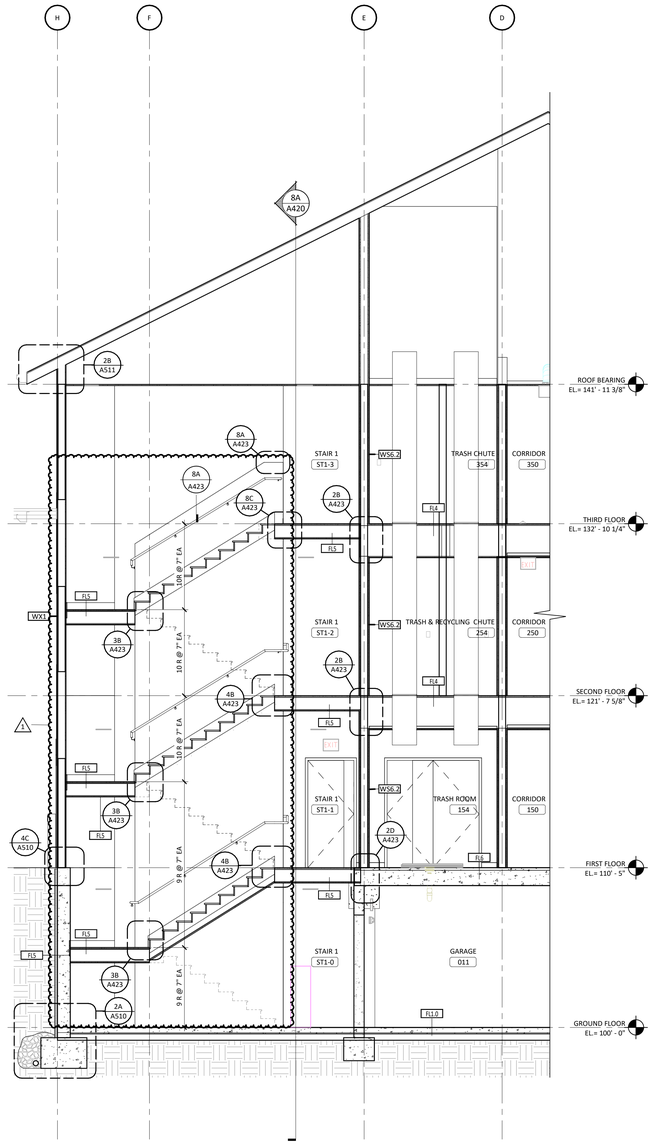

6A A420 Section 5
SCALE: 1/4" = 1'-0"

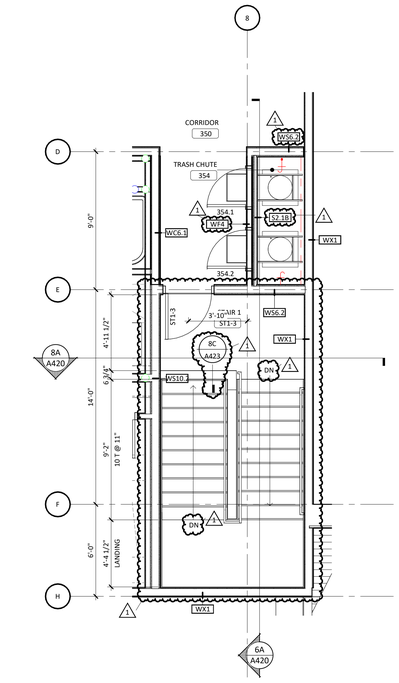

4C A420 STAIR 1 - THIRD FLOOR
SCALE: 1/4" = 1'-0"

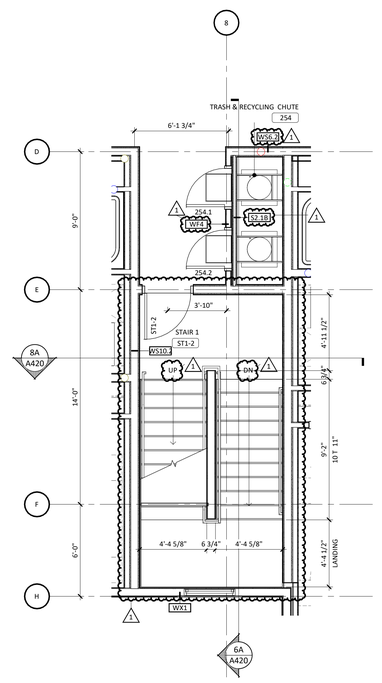

2C A420 STAIR 1 - SECOND FLOOR
SCALE: 1/4" = 1'-0"

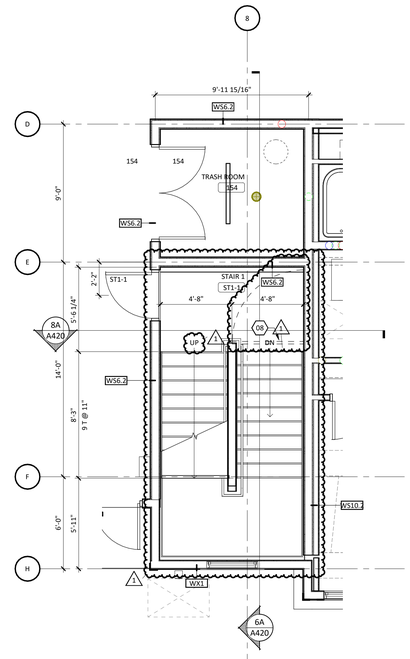

4A A420 STAIR 1 - FIRST FLOOR
SCALE: 1/4" = 1'-0"

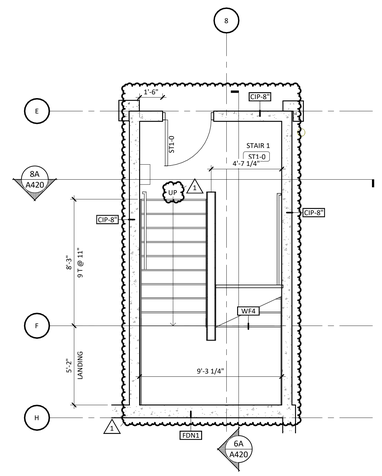

2A A420 STAIR 1 - GROUND FLOOR
SCALE: 1/4" = 1'-0"

JLG architects
322 1st Ave N, Suite #600
Minneapolis, MN 55401
phone 6 1 2.7 4 6.4 2 6 0
facsimile 6 1 2.7 4 6.4 7 5 4
www.jlgarchitects.com
copyright © 2020

REVISION SCHEDULE

NO.	DESCRIPTION	DATE
1	PR 02	9/21/20

I HEREBY CERTIFY THAT THIS PLAN WAS PREPARED BY ME OR UNDER MY DIRECT SUPERVISION AND THAT I AM A DULY REGISTERED ARCHITECT UNDER THE LAWS OF THE STATE OF MINNESOTA

NICOLE WASHBURN, AIA
REG. NO 46546
DATE 9/21/2020

LWO DEVELOPMENT, LLC
# EASTGATE APARTMENTS
OWATONNA, MN

DATE
06/19/2020
PHASE
CONSTRUCTION DOCUMENTS
PROJECT
18126
SHEET
A420
VERTICAL CIRCULATION

11/24/2020 12:03:20 PM

SHEET MATERIAL ID LIST

MATERIAL ID	SPEC SECTION & DESCRIPTION
DRAIN BRD-1	07 1300 - DRAINAGE BOARD
WTR PRF-2	07 1300 - SELF-ADHERING RUBBERIZED ASPHALT SHEETS
WTR PRF-7	07 1300 - PRE-APPLIED SHEET WATERPROOFING

VERTICAL CIRCULATION

ID	DESCRIPTION
1	WE ARE PROPOSING TWO LAYERS OF 5/8" TYPE X GYPSUM BOARD, CONSISTENT THICKNESS WITH ADJACENT 1 HOUR RATED 'WAA 1' WALL ASSEMBLY. GA FILE NO. WP 4230 IS USED AS THE BASIS FOR FASTENING THE TWO LAYERS OF GYPSUM BOARD. THE BASE LAYER OF GYPSUM BOARD WILL BE ATTACHED AT RIGHT ANGLES AT EACH SIDE WITH 2 1/4" TYPE S OR W DRYWALL SCREWS 24" O.C. THE FACE LAYER OF GYPSUM BOARD WILL BE APPLIED AT RIGHT ANGLES AT EACH SIDE WITH 2 1/4" TYPE S DRYWALL SCREWS 8" O.C. JOINTS WILL BE STAGGERED 24" BETWEEN LAYERS OF GYPSUM BOARD.

JLG architects
322 1st Ave N, Suite #600
Minneapolis, MN 55401
phone 6 1 2.7 4 6.4 2 6 0
facsimile 6 1 2.7 4 6.4 7 5 4
www.jlgarchitects.com

copyright © 2020

REVISION SCHEDULE

NO.	DESCRIPTION	DATE
1	PR 02	9/21/20

I HEREBY CERTIFY THAT THIS PLAN WAS PREPARED BY ME OR UNDER MY DIRECT SUPERVISION AND THAT I AM A DULY REGISTERED ARCHITECT UNDER THE LAWS OF THE STATE OF MINNESOTA

NICOLE WASHBURN, AIA — REG. NO 46546 — DATE 9/21/2020

LWO DEVELOPMENT, LLC
# EASTGATE APARTMENTS
OWATONNA, MN

DATE 06/19/2020
PHASE CONSTRUCTION DOCUMENTS
PROJECT 18126
SHEET A421
VERTICAL CIRCULATION

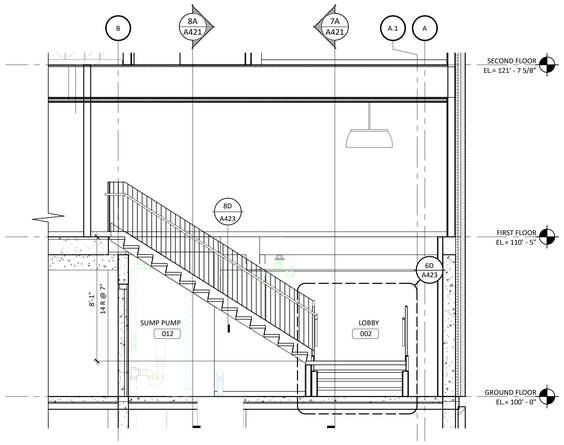

8D A421 LOBBY STAIR - LONGITUDINAL SECTION 1
SCALE: 1/4" = 1'-0"

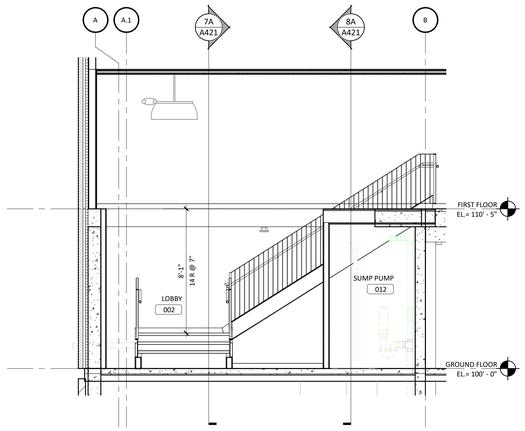

5D A421 SECTION 4
SCALE: 1/4" = 1'-0"

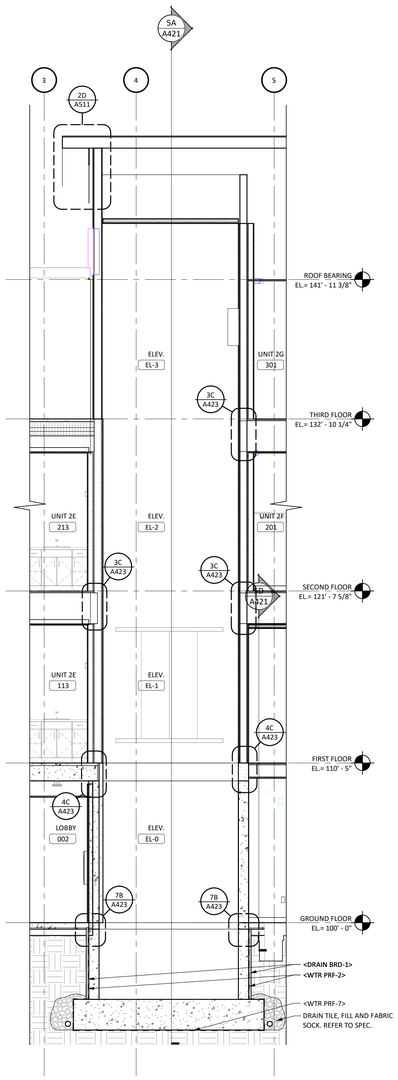

8A A421 SECTION 1
SCALE: 1/4" = 1'-0"

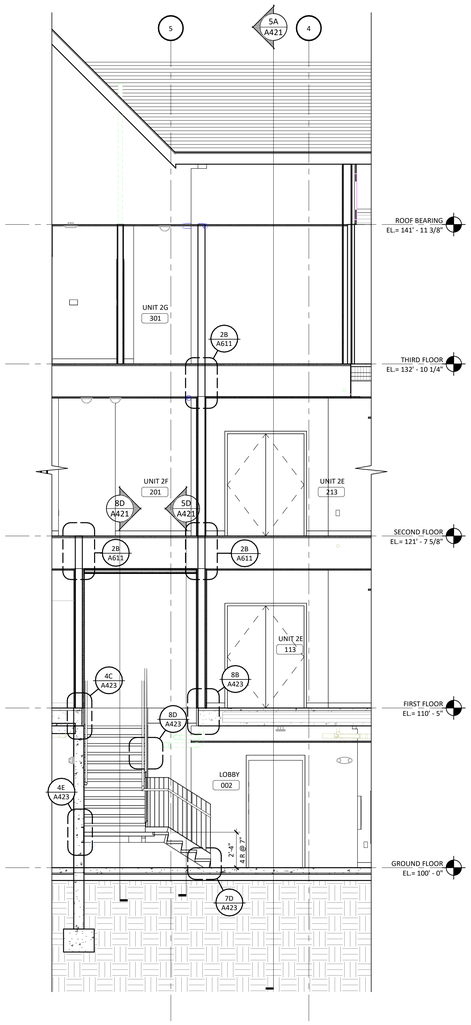

7A A421 LOBBY STAIR - LATITUDINAL SECTION
SCALE: 1/4" = 1'-0"

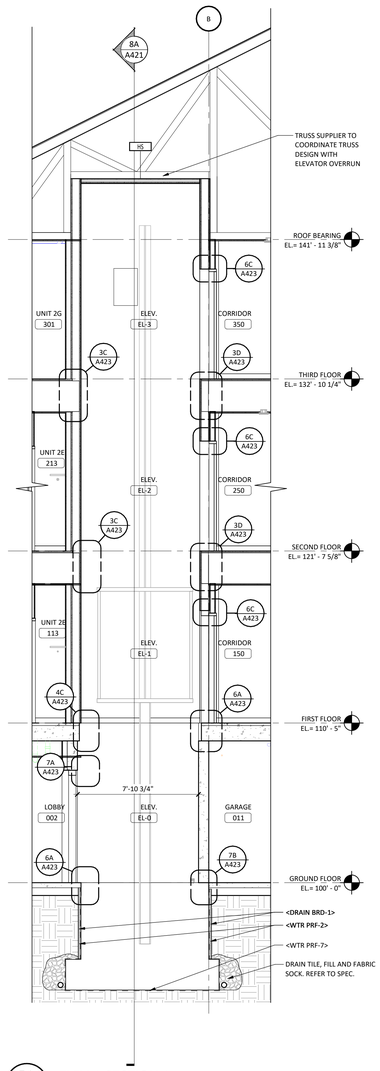

5A A421 ELEV-1 SECTION 1
SCALE: 1/4" = 1'-0"

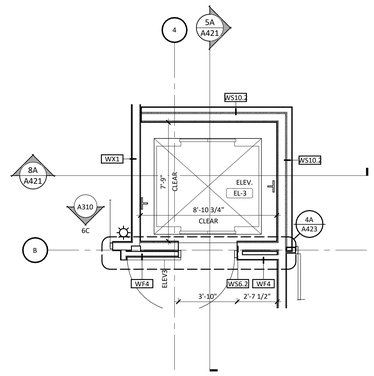

4C A421 ELEVATOR - THIRD FLOOR
SCALE: 1/4" = 1'-0"

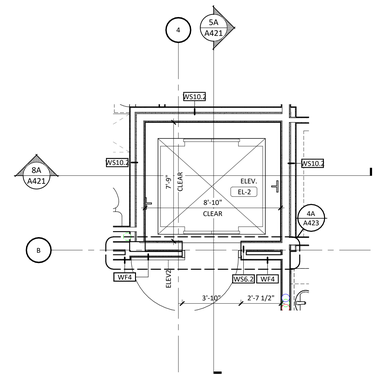

2C A421 ELEVATOR - SECOND FLOOR
SCALE: 1/4" = 1'-0"

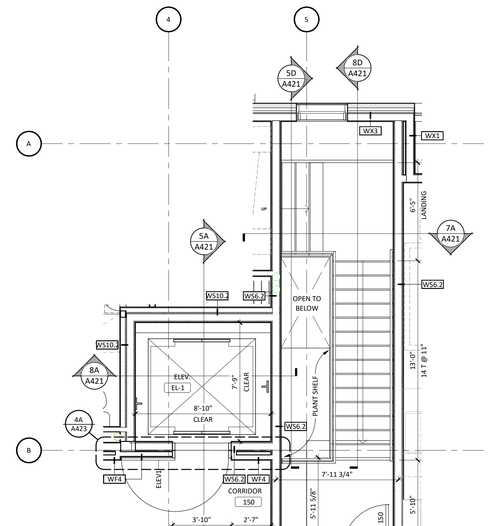

4A A421 ELEVATOR & NORTH STAIR - FIRST FLOOR
SCALE: 1/4" = 1'-0"

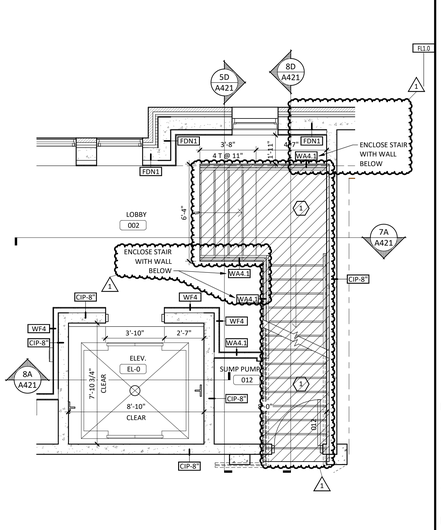

2A A421 ELEVATOR & NORTH STAIR - GROUND FLOOR
SCALE: 1/4" = 1'-0"

SHEET MATERIAL ID LIST

MATERIAL ID	SPEC SECTION & DESCRIPTION

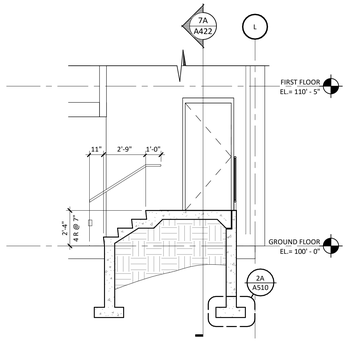

8E A422 EXTERIOR STAIR SECTION
SCALE: 1/4" = 1'-0"

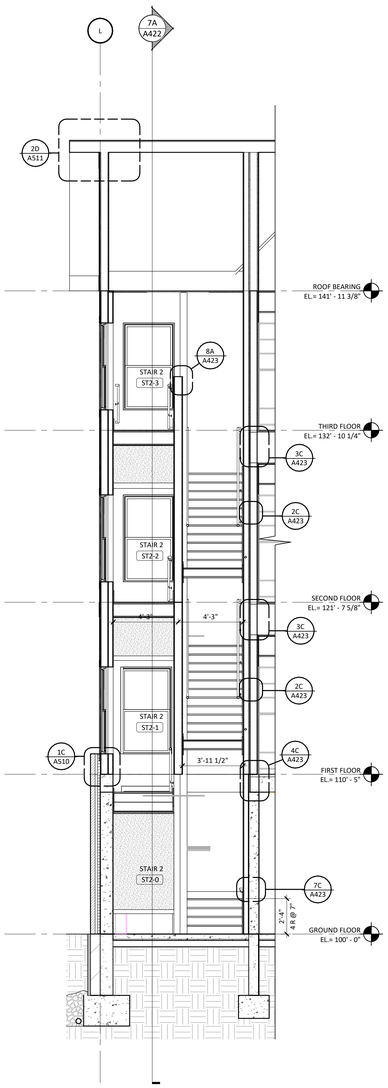

8A A422 STAIR 2 - LATITUDINAL SECTION
SCALE: 1/4" = 1'-0"

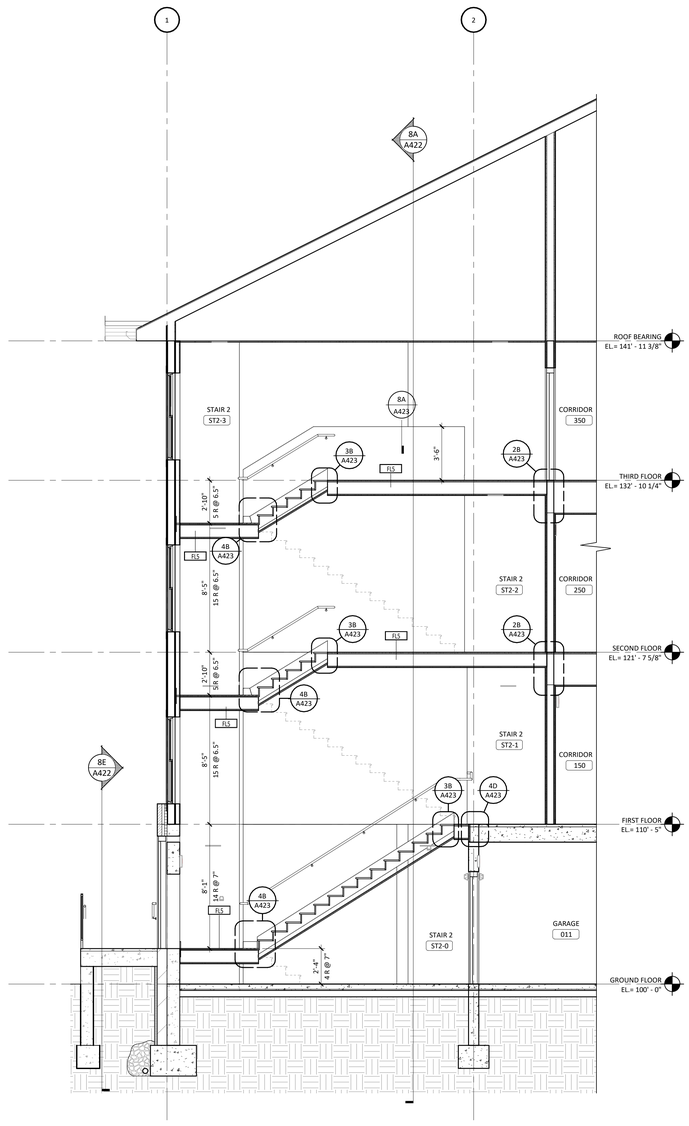

7A A422 STAIR 2 - LONGITUDINAL SECTION
SCALE: 1/4" = 1'-0"

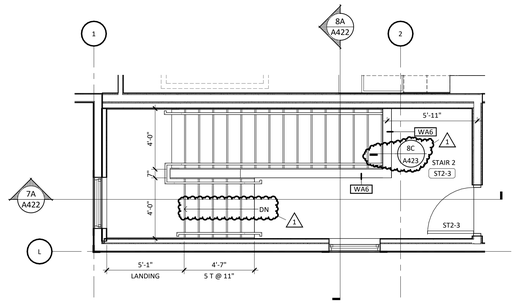

4B A422 STAIR 2 - THIRD FLOOR
SCALE: 1/4" = 1'-0"

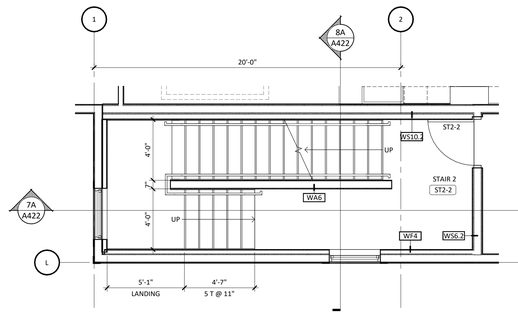

2B A422 STAIR 2 - SECOND FLOOR
SCALE: 1/4" = 1'-0"

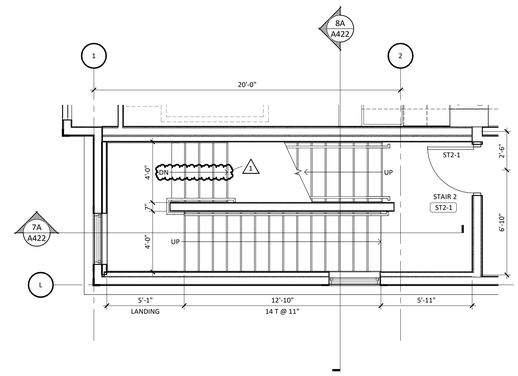

4A A422 STAIR 2 - FIRST FLOOR
SCALE: 1/4" = 1'-0"

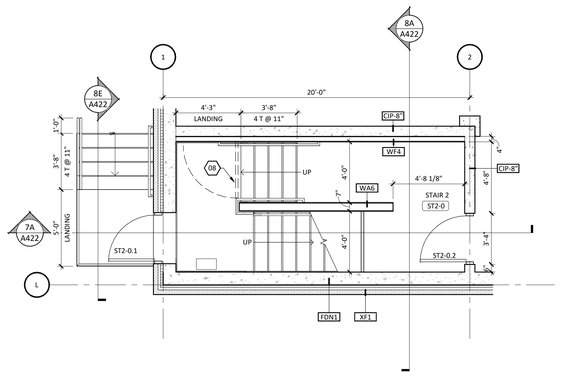

2A A422 STAIR 2 - GROUND FLOOR
SCALE: 1/4" = 1'-0"

JLG architects
322 1st Ave N, Suite #600
Minneapolis, MN 55401
phone 6 1 2.7 4 6.4 2 6 0
facsimile 6 1 2.7 4 6.4 7 5 4
www.jlgarchitects.com

copyright © 2020

REVISION SCHEDULE

NO.	DESCRIPTION	DATE
1	PR 02	9/21/20

I HEREBY CERTIFY THAT THIS PLAN WAS PREPARED BY ME OR UNDER MY DIRECT SUPERVISION AND THAT I AM A DULY REGISTERED ARCHITECT UNDER THE LAWS OF THE STATE OF MINNESOTA

NICOLE WASHBURN, AIA — 46546 — REG. NO — 9/21/2020 — DATE

LWO DEVELOPMENT, LLC
# EASTGATE APARTMENTS
OWATONNA, MN

DATE
06/19/2020
PHASE
CONSTRUCTION DOCUMENTS
PROJECT
18126
SHEET
A422
VERTICAL CIRCULATION

11/24/2020 12:03:37 PM

VERTICAL CIRCULATION

ID	DESCRIPTION
1	WE ARE PROPOSING TWO LAYERS OF 5/8" TYPE X GYPSUM BOARD, CONSISTENT THICKNESS WITH ADJACENT 1 HOUR RATED 'WA4.1' WALL ASSEMBLY. GA FILE NO. WP 4230 IS USED AS THE BASIS FOR FASTENING THE TWO LAYERS OF GYPSUM BOARD. THE BASE LAYER OF GYPSUM BOARD WILL BE ATTACHED AT RIGHT ANGLES AT EACH SIDE WITH 2 1/4" TYPE S OR W DRYWALL SCREWS 24" O.C. THE FACE LAYER OF GYPSUM BOARD WILL BE APPLIED AT RIGHT ANGLES AT EACH SIDE WITH 2 1/4" TYPE S DRYWALL SCREWS 8" O.C. JOINTS WILL BE STAGGERED 24" BETWEEN LAYERS OF GYPSUM BOARD.

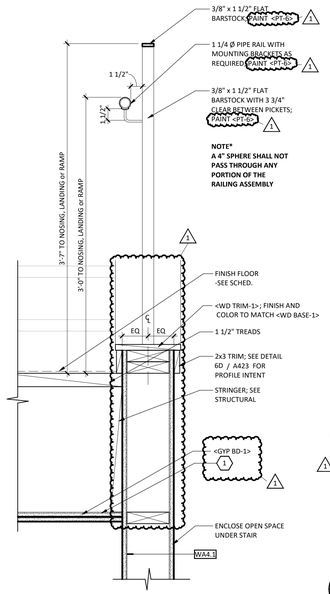

8D A423 PICKET RAIL DETAIL
SCALE: 1 1/2" = 1'-0"

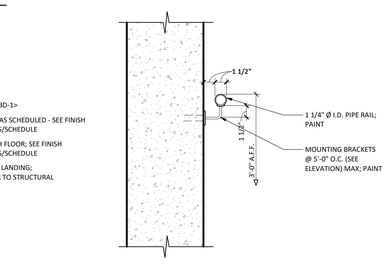

7D A423 BOTTOM OF STAIRS
SCALE: 1 1/2" = 1'-0"

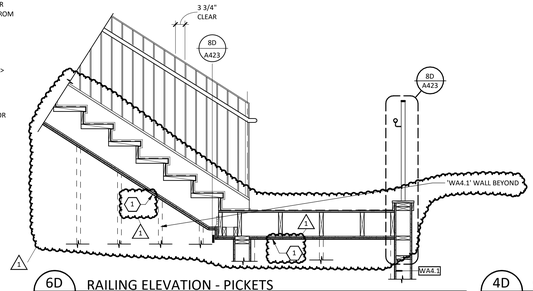

6D A423 RAILING ELEVATION - PICKETS
SCALE: 1/2" = 1'-0"

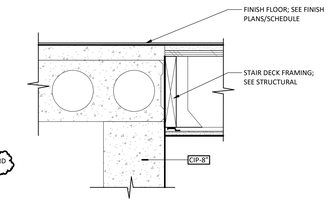

4D A423 STAIR DECK & PRECAST FLOOR TRANSITION
SCALE: 1 1/2" = 1'-0"

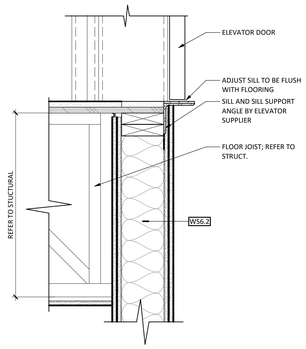

3D A423 ELEVATOR DOOR TRUSS EDGE
SCALE: 1 1/2" = 1'-0"

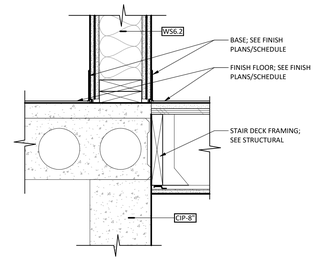

2D A423 DECK & PRECAST FLOOR CONNECTION
SCALE: 1 1/2" = 1'-0"

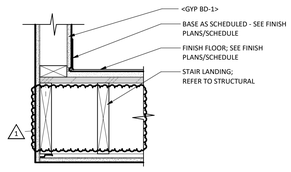

8C A423 STAIR LANDING
SCALE: 1 1/2" = 1'-0"

7C A423 WALL MOUNTED RAIL at PRECAST
SCALE: 1 1/2" = 1'-0"

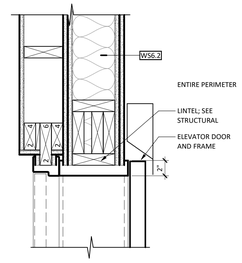

6C A423 ELEVATOR DOOR HEAD @ WS6.2
SCALE: 1 1/2" = 1'-0"

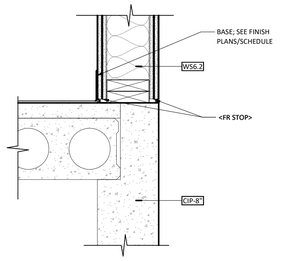

4C A423 PRECAST FLOOR AND SHAFT WALL DETAIL
SCALE: 1 1/2" = 1'-0"

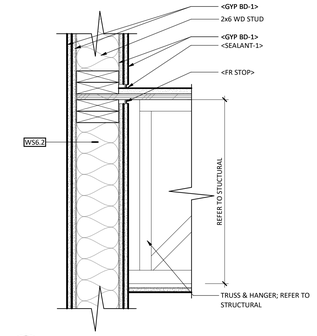

3C A423 SHAFT WALL - FLOOR CONNECTION
SCALE: 1 1/2" = 1'-0"

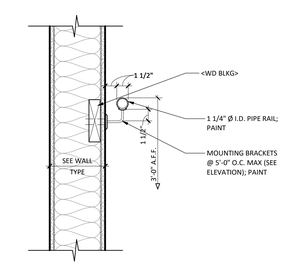

2C A423 WALL MOUNTED RAIL @ STUDS
SCALE: 1 1/2" = 1'-0"

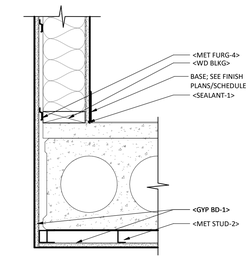

8B A423 Drafting 1
SCALE: 1 1/2" = 1'-0"

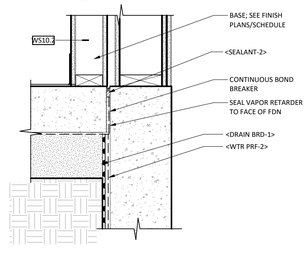

7B A423 ELEVATOR PIT EDGE
SCALE: 1 1/2" = 1'-0"

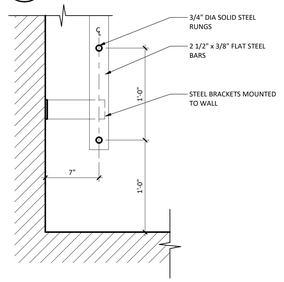

6B A423 ELEVATOR LADDER DETAIL
SCALE: 1 1/2" = 1'-0"

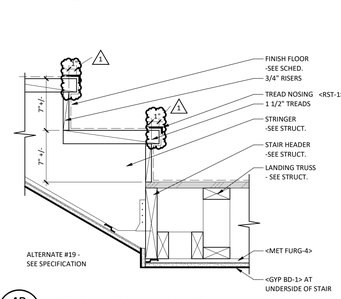

4B A423 STAIR LANDING - LOWER
SCALE: 1 1/2" = 1'-0"

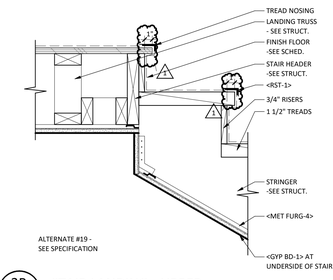

3B A423 STAIR LANDING - UPPER
SCALE: 1 1/2" = 1'-0"

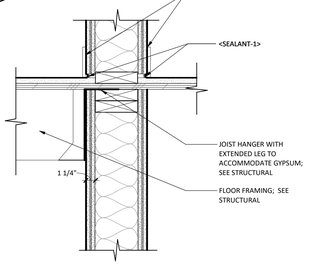

2B A423 DECK @ STAIR SHAFT
SCALE: 1 1/2" = 1'-0"

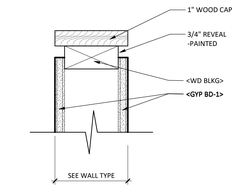

8A A423 STUD WALL CAP
SCALE: 3" = 1'-0"

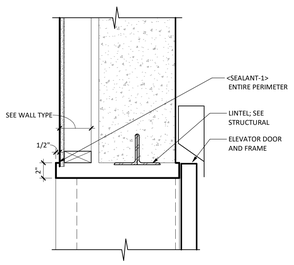

7A A423 ELEVATOR DOOR HEAD @ CIP-8" WALL
SCALE: 1 1/2" = 1'-0"

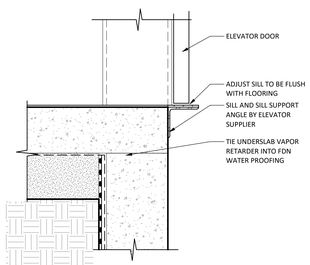

6A A423 ELEVATOR DOOR SLAB EDGE
SCALE: 1 1/2" = 1'-0"

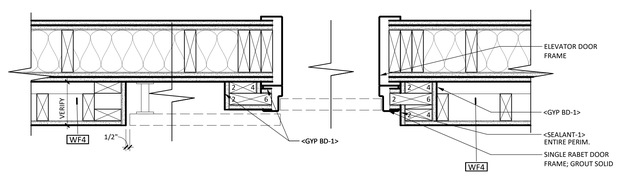

4A A423 ELEV. SMOKE DOOR - JAMB
SCALE: 1 1/2" = 1'-0"

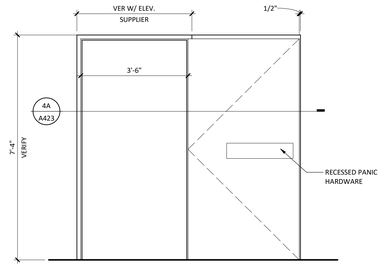

2A A423 ELEV. SMOKE DOOR - ELEVATION
SCALE: 1/2" = 1'-0"

JLG architects
322 1st Ave N, Suite #600
Minneapolis, MN 55401
phone 6 1 2 7 4 6 4 2 6 0
facsimile 6 1 2 7 4 6 4 7 5 4
www.jlgarchitects.com
copyright © 2020

REVISION SCHEDULE

NO.	DESCRIPTION	DATE
1	PR 02	9/21/20

I HEREBY CERTIFY THAT THIS PLAN WAS PREPARED BY ME OR UNDER MY DIRECT SUPERVISION AND THAT I AM A DULY REGISTERED ARCHITECT UNDER THE LAWS OF THE STATE OF MINNESOTA

NICOLE WASHBURN, AIA — 46546 — 9/21/2020
REG. NO — DATE

LWO DEVELOPMENT, LLC
# EASTGATE APARTMENTS
OWATONNA, MN

DATE 06/19/2020
PHASE CONSTRUCTION DOCUMENTS
PROJECT 18126
SHEET **A423**
VERTICAL CIRC. DETAILS

1/24/2020 12:03:42 PM

SHEET MATERIAL ID LIST

MATERIAL ID	SPEC SECTION & DESCRIPTION

JLG architects

322 1st Ave N, Suite #600
Minneapolis, MN 55401
phone 6 1 2.7 4 6.4 2 6 0
facsimile 6 1 2.7 4 6.4 7 5 4
www.jlgarchitects.com
copyright © 2020

REVISION SCHEDULE

NO.	DESCRIPTION	DATE
1	PR 02	9/21/20

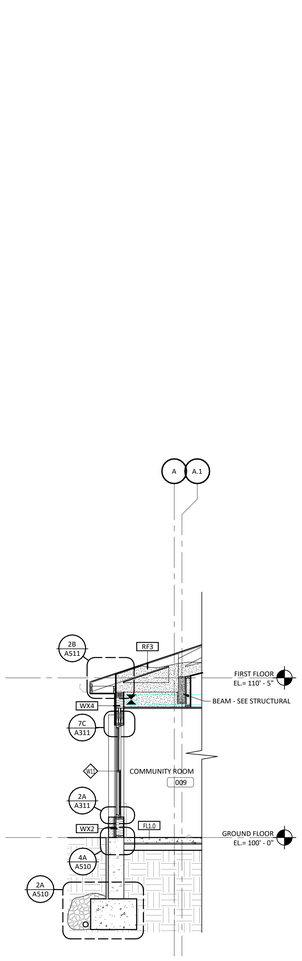

6A A501 WALL SECTION 6
SCALE: 1/4" = 1'-0"

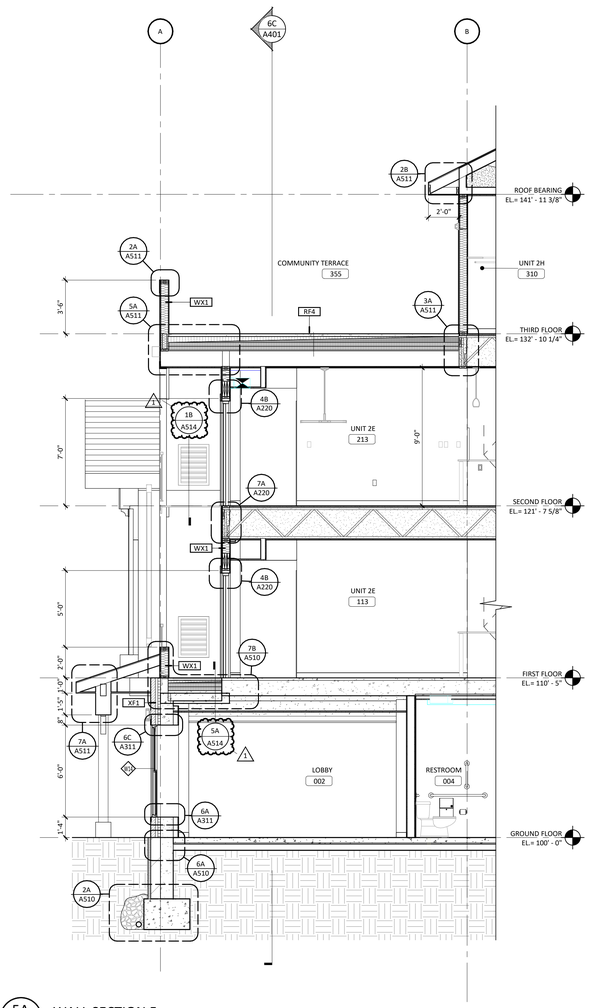

5A A501 WALL SECTION 5
SCALE: 1/4" = 1'-0"

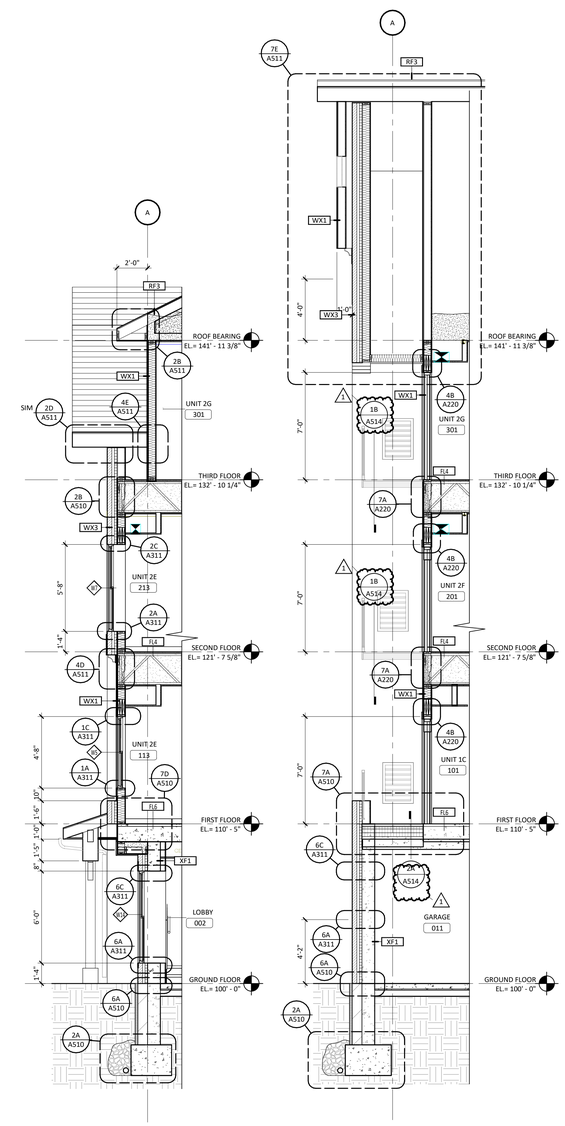

4A A501 WALL SECTION 4
SCALE: 1/4" = 1'-0"

3A A501 WALL SECTION 3
SCALE: 1/4" = 1'-0"

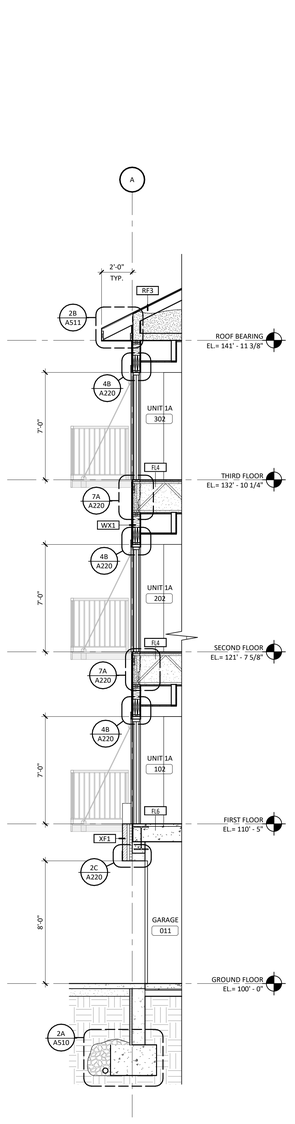

2A A501 WALL SECTION 2
SCALE: 1/4" = 1'-0"

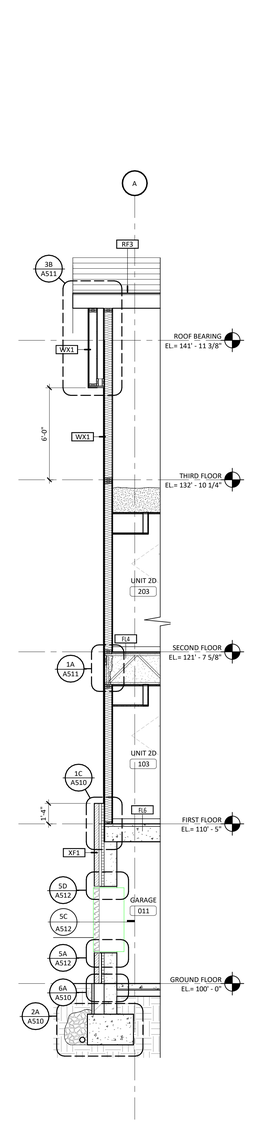

1A A501 WALL SECTION 1
SCALE: 1/4" = 1'-0"

I HEREBY CERTIFY THAT THIS PLAN WAS PREPARED BY ME OR UNDER MY DIRECT SUPERVISION AND THAT I AM A DULY REGISTERED ARCHITECT UNDER THE LAWS OF THE STATE OF MINNESOTA

NICOLE WASHBURN, AIA
46546
REG. NO
9/21/2020
DATE

LWO DEVELOPMENT, LLC
# EASTGATE APARTMENTS
OWATONNA, MN

DATE
06/19/2020
PHASE
CONSTRUCTION DOCUMENTS
PROJECT
18126
SHEET
A501
EXTERIOR WALL SECTIONS

11/24/2020 12:03:48 PM

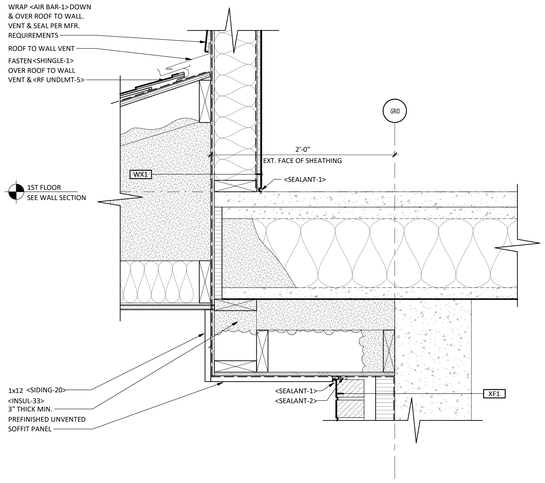

7D A510 DETAIL AT PODIUM WITH ENTRY CANOPY
SCALE: 1 1/2" = 1'-0"

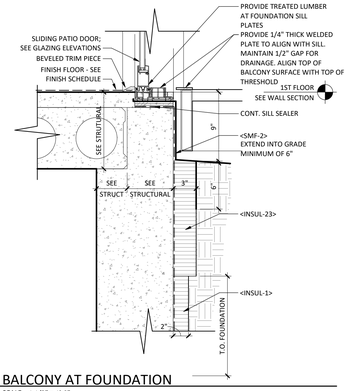

5E A510 BALCONY AT FOUNDATION
SCALE: 1 1/2" = 1'-0"

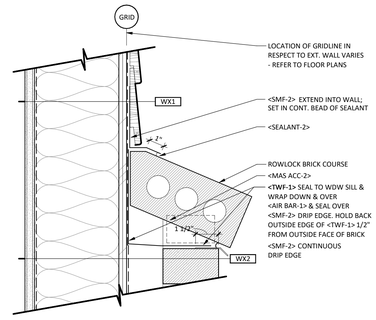

4E A510 LAP SIDING TO BRICK
SCALE: 3" = 1'-0"

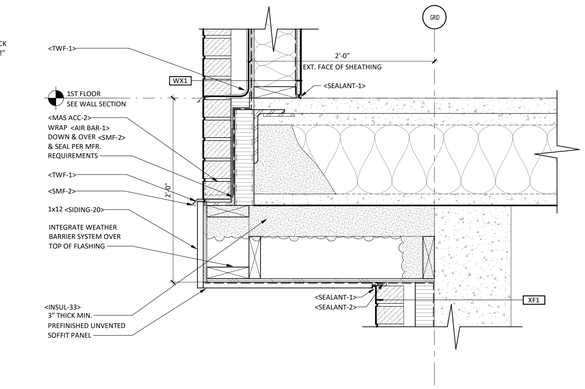

SHEET MATERIAL ID LIST

MATERIAL ID	SPEC SECTION & DESCRIPTION
AIR BAR-1	07 2500 - AIR BARRIER; MECHANICALLY FASTENED
BRICK-1	04 2000 - FACE BRICK
CAST UNDLMNT-1	03 5400 - GYPSUM BASED UNDERLAYMENT
EPDM-2	07 5300 - FULLY ADHERED EPDM ROOFING SYSTEM
INSUL-1	07 2100 - EXTRUDED POLYSTYRENE INSULATION W/ DRAINAGE CHANNELS
INSUL-15	07 2100 - POLYISOCYANURATE INSULATION, FOIL FACED
INSUL-23	07 2100 - ROCK WOOL EXTERIOR CAVITY BOARD INSULATION
INSUL-33	07 2126 - BULK CELLULOSE FIBER INSULATION FOR PNEUMATIC PLACEMENT
INSUL-36	07 2119 - CLOSED CELL SPRAY FOAM INSULATION
MAS ACC-2	04 2000 - POLYMER MESH HEAD JOINT WEEP
MAS ACC-5	04 2000 - CAVITY MORTAR CONTROL MESH
PAVER-1	07 5300 - CONCRETE ROOF PAVER
RF UNDLMT-5	07 2500 - SELF-ADHERENG ICE/WATER SHIELD
SEALANT-1	07 9200 - JOINT SEALANT OR CAULKING
SEALANT-2	07 9200 - JOINT SEALANT OR CAULKING WITH BACKER ROD
SHINGLE-1	07 3113 - LAMINATED FIBERGLASS SHINGLES
SIDING-20	07 4646 - MANUFACTURED WOOD TRIM OR FIBER CEMENT BOARD TRIM
SMF-2	07 6200 - PREFINISHED ALUMINUM FLASHING
TWF-1	04 2000 - 40 MIL SELF-ADHERING MEMBRANE W/ STAINLESS STEEL DRIP
VPR RET-1	07 2500 - 6 MIL POLY VAPOR RETARDER SHEET
WD BLKG	06 1000 - WOOD BLOCKING
WD SHTG-1	06 1000 - FLOOR SHEATHING, 3/4" STURD-I-FLOOR, EXPOSURE 1, T&G
WD SHTG-21	06 1000 - 15/32" PLYWOOD WALL SHEATHING; FIRE RETARDANT TREATED
WD SHTG-31	06 1000 - 1/2" PLYWOOD; GRADE C-C; FIRE RETARDANT TREATED
WTR PRF-2	07 1300 - SELF-ADHERING RUBBERIZED ASPHALT SHEETS

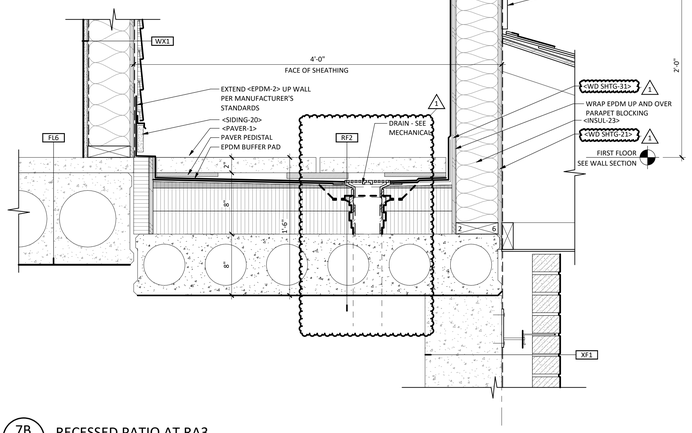

7B A510 RECESSED PATIO AT RA3
SCALE: 1 1/2" = 1'-0"

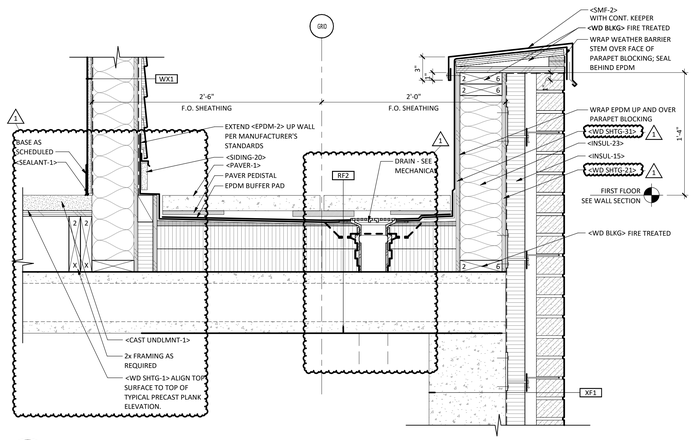

7A A510 RECESSED PLANK AT BALCONY
SCALE: 1 1/2" = 1'-0"

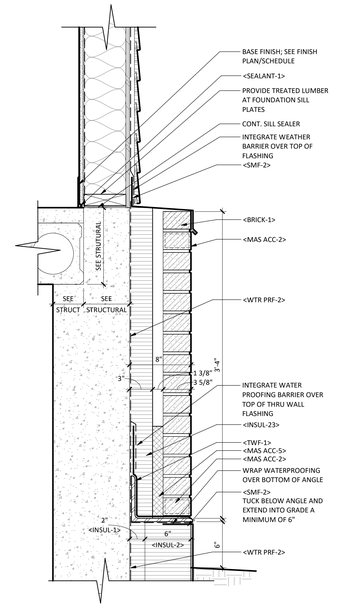

5C A510 WX1 - FDN @ BRICK
SCALE: 1 1/2" = 1'-0"

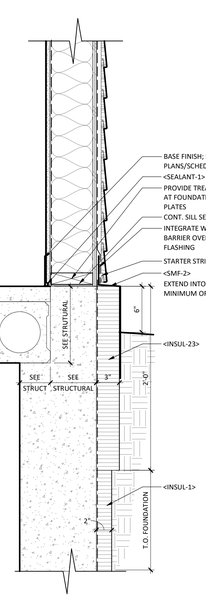

4C A510 WX1 - FDN DETAIL
SCALE: 1 1/2" = 1'-0"

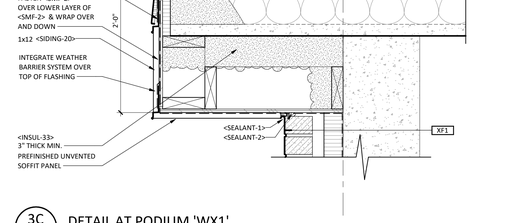

3D A510 DETAIL AT PODIUM 'WX2'
SCALE: 1 1/2" = 1'-0"

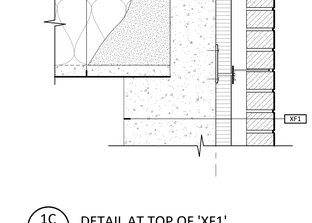

1C A510 DETAIL AT TOP OF 'XF1'
SCALE: 1 1/2" = 1'-0"

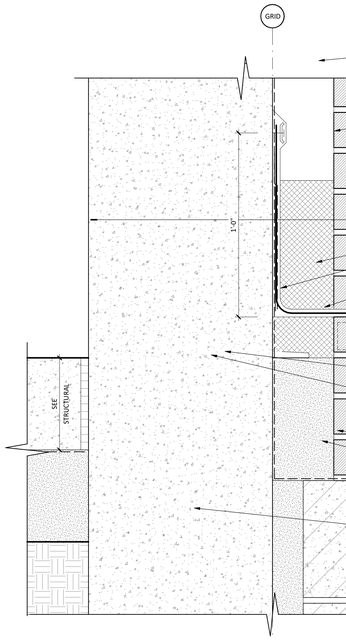

6A A510 BRICK LEDGE AT FDN3
SCALE: 3" = 1'-0"

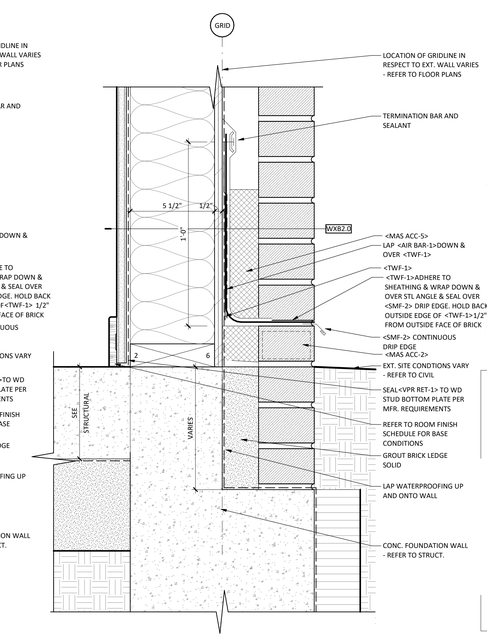

4A A510 BRICK LEDGE @ FDN1
SCALE: 3" = 1'-0"

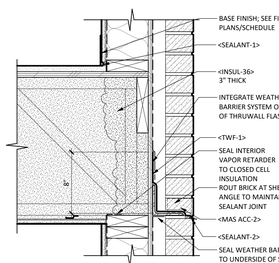

2B A510 WX3 - RIM JOIST/SHELF ANGLE
SCALE: 1 1/2" = 1'-0"

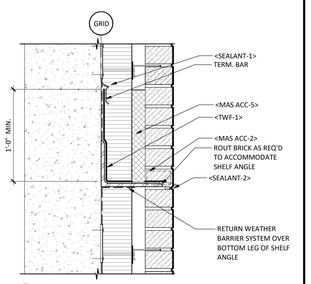

1B A510 WF1 - SHELF ANGLE
SCALE: 1 1/2" = 1'-0"

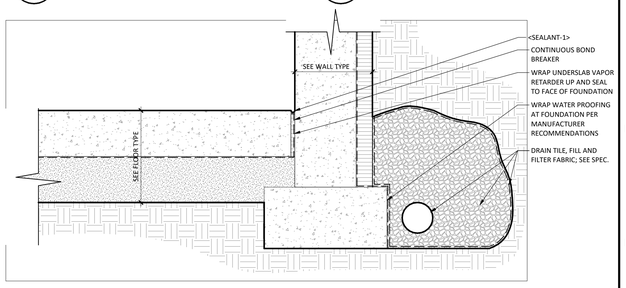

2A A510 XB5 - DRAIN TILE DETAIL
SCALE: 1 1/2" = 1'-0"

REVISION SCHEDULE

NO.	DESCRIPTION	DATE
1	PR 02	9/21/20

JLG architects
322 1st Ave N, Suite #600
Minneapolis, MN 55401
phone 6 1 2.7 4 6.4 2 6 0
facsimile 6 1 2.7 4 6.4 7 5 4
www.jlgarchitects.com
copyright © 2020

I HEREBY CERTIFY THAT THIS PLAN WAS PREPARED BY ME OR UNDER MY DIRECT SUPERVISION AND THAT I AM A DULY REGISTERED ARCHITECT UNDER THE LAWS OF THE STATE OF MINNESOTA
NICOLE WASHBURN, AIA
46546
REG. NO
9/21/2020
DATE

LWO DEVELOPMENT, LLC
# EASTGATE APARTMENTS
OWATONNA, MN

DATE
06/19/2020
PHASE
CONSTRUCTION DOCUMENTS
PROJECT
18126
SHEET
A510
EXTERIOR DETAILS

11/24/2020 12:03:54 PM

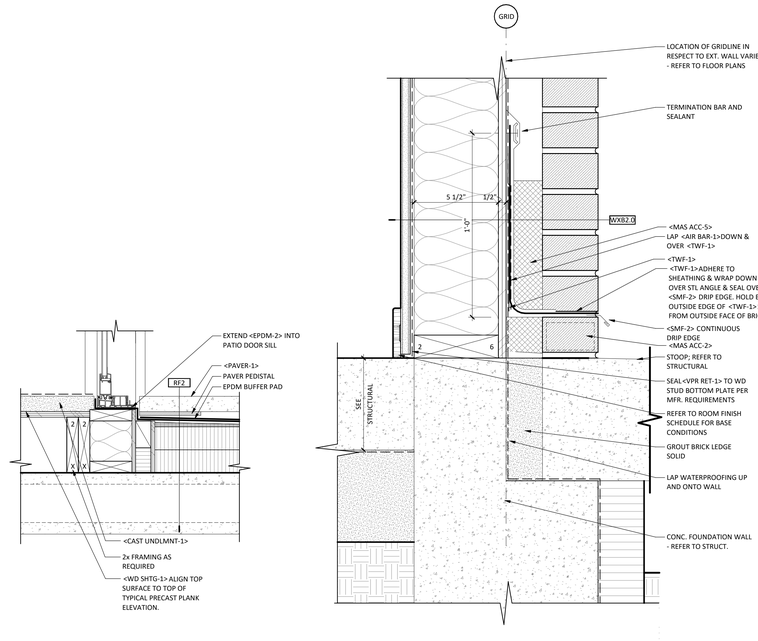

4B / A514 PATIO DOOR SILL AT UNIT 101
SCALE: 1 1/2" = 1'-0"

3B / A514 STOOP AT 'WB2'
SCALE: 3" = 1'-0"

1B / A514 LEDGER BOARD AT BALCONY SIDE
SCALE: 3" = 1'-0"

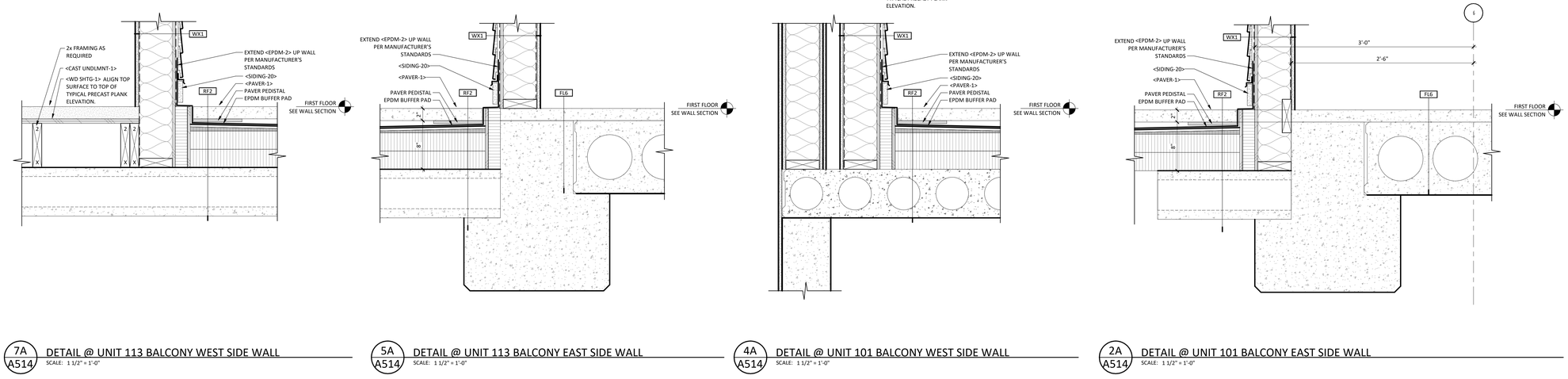

7A / A514 DETAIL @ UNIT 113 BALCONY WEST SIDE WALL
SCALE: 1 1/2" = 1'-0"

5A / A514 DETAIL @ UNIT 113 BALCONY EAST SIDE WALL
SCALE: 1 1/2" = 1'-0"

4A / A514 DETAIL @ UNIT 101 BALCONY WEST SIDE WALL
SCALE: 1 1/2" = 1'-0"

2A / A514 DETAIL @ UNIT 101 BALCONY EAST SIDE WALL
SCALE: 1 1/2" = 1'-0"

JLG architects
322 1st Ave N, Suite #600
Minneapolis, MN 55401
phone 6 1 2.7 4 6.4 2 6 0
facsimile 6 1 2.7 4 6.4 7 5 4
www.jlgarchitects.com
copyright © 2020

REVISION SCHEDULE

NO.	DESCRIPTION	DATE
1	PR 02	9/21/20

I HEREBY CERTIFY THAT THIS PLAN WAS PREPARED BY ME OR UNDER MY DIRECT SUPERVISION AND THAT I AM A DULY REGISTERED ARCHITECT UNDER THE LAWS OF THE STATE OF MINNESOTA

NICOLE WASHBURN, AIA — REG. NO 46546 — DATE 9/21/2020

LWO DEVELOPMENT, LLC
# EASTGATE APARTMENTS
OWATONNA, MN

DATE 09/02/20
PHASE CONSTRUCTION DOCUMENTS
PROJECT 18126

SHEET **A514**
EXTERIOR DETAILS

1

11/24/2020 12:03:57 PM



1 A701 FIRST FLOOR - REFLECTED CEILING PLAN

SCALE: 1/8" = 1'-0"

01 CEILING PLAN KEYNOTES

KEYNOTE	DESCRIPTION
01	CEILING OPEN TO PRECAST ABOVE.

RCP GENERAL NOTES

1. COORDINATE FINAL SIZE AND FINAL LOCATION OF ALL ACCESS PANELS WITH TRADE REQUIRING SAME.
2. COORDINATE CEILING SUSPENSION SYSTEMS WITH OTHER CEILING SPACE EQUIPMENT SUPPORTING DEVICES.
3. FOR PARTITION TYPES, SEE SHEET G103
4. REFER TO LIFE SAFETY PLANS FOR LOCATIONS OF FIRE AND SMOKE RATED PARTITIONS.
5. CEILING GRID SYSTEM TO BE CENTERED IN ROOM IN BOTH DIRECTIONS UNLESS NOTED OTHERWISE.
6. NO CEILING PANEL TO BE CUT TO LESS THAN 6" WIDTH AT CEILING PANEL INSTALLATION TYPICAL.
7. AT CONDITIONS WHERE CEILING TILE PADS EXCEED 2'-0" TRIM 2'X4' CEILING PADS AS REQUIRED TO FIT.
8. SPRINKLER HEADS TO BE LOCATED IN THE CENTER OF CEILING PANELS TYPICALLY.
9. PAINT ALL EXPOSED (VISUAL) CONSTRUCTION ABOVE CEILINGS INCLUDING BUT NOT LIMITED TO MECH. AND ELECTRICAL ITEMS. SEE NOTES ON SHEET FOR EXTENT OF SCOPE.
10. VERIFY EXACT LOCATIONS OF SOFFIT AND CEILING CONTROL JOINTS WITH THE ARCHITECTS REPRESENTATIVE IN THE FIELD.
11. REFER TO DETAIL "XX" FOR PENETRATION OF UNISTRUT IN ACOUSTIC CEILING.
12. COORDINATE THE LOCATION OF ESCUTCHEON PLATES AT CEILING PANEL PENETRATIONS WITH ELECTRICAL AND MECHANICAL TRADES.
13. SEE ELECTRICAL DRAWINGS FOR FIXTURE TYPES AND NIGHT LIGHT LOCATIONS.
14. PATCH AND REPAIR THE EXISTING CEILING PANELS AND GRID WHERE WALLS WERE REMOVED.
15. CONTRACTOR SHALL MAINTAIN THE FIRE RATING INTEGRITY OF ALL EXISTING PARTITIONS INDICATED AS FIRE RESISTANCE RATED. ADVISE THE ARCHITECT OF ANY PRE-EXISTING BREACHES DISCOVERED IN THE COURSE OF WORK.
16. REFER TO UNIT PLAN SHEETS FOR UNIT RCP INFORMATION.
17. INSTALL <GYP BD-7 AT BOTTOM SIDE OF STAIRS OVER <METAL FURG-4> AT 24" O.C.
18. PAINT ALL GYPSUM CEILINGS PT-1 U.N.O.

REVISION SCHEDULE

NO.	DESCRIPTION	DATE
1	PR 02	9/21/20

JLG architects
322 1st Ave N, Suite #600
Minneapolis, MN 55401
phone 6 1 2.7 4 6.4 2 6 0
facsimile 6 1 2.7 4 6.4 7 5 4
www.jlgarchitects.com
copyright © 2020

I HEREBY CERTIFY THAT THIS PLAN WAS PREPARED BY ME OR UNDER MY DIRECT SUPERVISION AND THAT I AM A DULY REGISTERED ARCHITECT UNDER THE LAWS OF THE STATE OF MINNESOTA

NICOLE WASHBURN, AIA

REG. NO	DATE
46546	9/21/2020

LWO DEVELOPMENT, LLC
# EASTGATE APARTMENTS
OWATONNA, MN

DATE **06/19/2020**

PHASE CONSTRUCTION DOCUMENTS

PROJECT **18126**

SHEET **A701**

FIRST FLOOR RCP

11/24/2020 12:04:05 PM